Steel TIPS

STRUCTURAL STEEL EDUCATIONAL COUNCIL

TECHNICAL INFORMATION & PRODUCT SERVICE

NOVEMBER 1995

Seismic Design of Special Concentrically Braced Steel Frames

By
Roy Becker, S.E.

INTRODUCTION

• The primary purpose of this booklet is to present in a clear and simple, but yet precise and detailed manner, the seismic design required for laterally resisting steel frames known as "Special Concentrically Braced Frames" (SCBF). This booklet is a supplement and an update to the one entitled "Seismic Design Practice for Steel Buildings," 1988, which illustrated the seismic design of "Special Moment-Resisting Frames" (SMRF), "Ordinary Moment Resisting Frames" (OMRF), and "Ordinary Braced Frames" (OBF).

• The use of Special Concentrically Braced Frames (SCBF) is recognized in the 1994 edition of the "Uniform Building Code," and its detailed requirements for design are presented in UBC Section 2211.9. Also, in UBC Chapter 16, Table 16-N, this lateral force resisting system is defined as having an R_w=9, and a maximum height limit of 240 feet.

• Special Concentrically Braced Frames (SCBF) are distinguished from Ordinary Braced Frames (as defined in the 1994 UBC Section 2211.8) in that they possess improved post-buckling capacity of the frame; this is especially evident when Chevron Bracing is used. SCBF are so designed that when a brace in compression buckles during a major earthquake, the capacity of the frame to resist seismic forces is not seriously impaired. This is achieved through the many detailed requirements that prevent premature local buckling connection failures, and member failures even when there is overall buckling of a compression brace.
Hence, even when the seismic forces in the SCBF are perhaps several times larger than those prescribed by the UBC, the integrity of the frame remains, and the SCBF continues to successfully resist seismic forces without loosing substantial capacity.

• For the design of connections for the SCBF, the "Uniform Force Method" is illustrated and then employed. This method is also presented in the AISC Manual for "Load & Resistance Factor Design," Second Edition, Volume II. Although this method may initially appear to be complex, it is really an approach which simplifies design of braced frame connections.

• There are several items which should be emphasized and carefully considered when designing braced frames. These significant items are enumerated in Part IV–Design Recommendations.

CONTENTS

PART I — SEISMIC ANALYSIS

This portion of the booklet illustrates the general requirements for the seismic analysis and design of a 7-story building using the 1994 Uniform Building Code.

Both the determination of seismic forces and their distribution over the height and planar extent of the building are illustrated. In addition, the need for the braced frames to successfully resist seismic overturning forces is emphasized to the reader.

All of the seismic analysis is presented for a Regular Structure using the Static Lateral-Force Procedure of UBC Section 1628.2. However, since the building is over five stories in height (see UBC Section 1627.8.2, Item 3), if it were an Irregular Structure as defined in UBC Section 1627.8.3, Item 2, a Dynamic Analysis would be required for seismic forces.

SECTION A. GENERAL DESIGN INFORMATION

1. Code and Design Criteria:

The building will be designed in accordance with 1994 Edition of the Uniform Building Code (UBC). Seismic design is based on Chapter 16 of the UBC, which is essentially the same as the "Recommended Lateral Force Requirements," 1990, by the Structural Engineers Association of California (SEAOC Code).

Design of steel members and connection is based on Chapter 22 of the UBC. Most of the provisions of Chapter 22 of the UBC for Allowable Stress Design are also contained in the AISC Specifications dated June 1, 1989, contained in the Ninth Edition of the AISC Manual.

The structure is an office building, Group B occupancy, per Chapter 3 of UBC, and Type 1 construction, as per Chapter 6 of UBC. Two-hour fire protection for floors and roof and three-hour for columns and girders are required as per UBC Table No. 6-A. This protection is provided by a spray-on type of fireproofing material.

The building is located in Seismic Zone No. 4. The engineering geologist has determined that the soil profile consists of a dense soil where the depth exceeds 200 feet.

The frame is to be structural steel. As shown in Figure 1, it is braced in the N-S direction on column lines 1 and 5. Special moment frames are provided in the E-W direction, along column lines A and D. Floors and roof are 3-in. metal deck with 3 1/4-in. lightweight (110 pcf) concrete fill. Typical story height is 11 ft.-6 in., based on 8 ft.-0 in. clear ceiling height.

Material specifications are:
- Steel frame: A36
- High-strength bolts: A325-SC
- Welding electrodes: E70

2. Loads:

Roof Loading:	
Roofing and insulation	7.0 psf
Metal deck	3.0
Concrete fill	44.0
Ceiling and mechanical	5.0
Steel framing and fireproofing	8.0
Dead Load	67.0 psf
Live load (reducible), UBC Sect. 1605.1	20.00
Total Load	87.0 psf
Floor Loading:	
Metal deck	3.0 psf
Concrete fill	44.0
Ceiling and mechanical	5.0
Partitions, UBC Sect. 1604.4	20.0
Steel framing, incl. beams, girders, columns, and spray-on fireproofing	13.0
Dead Load	85.0 psf
Live load (reducible), UBC Sect. 1604.1	50.0
Total Load	135.0 psf
Curtain Wall:	
Average weight including column and spandrel covers	15.0 psf

3. Framing:

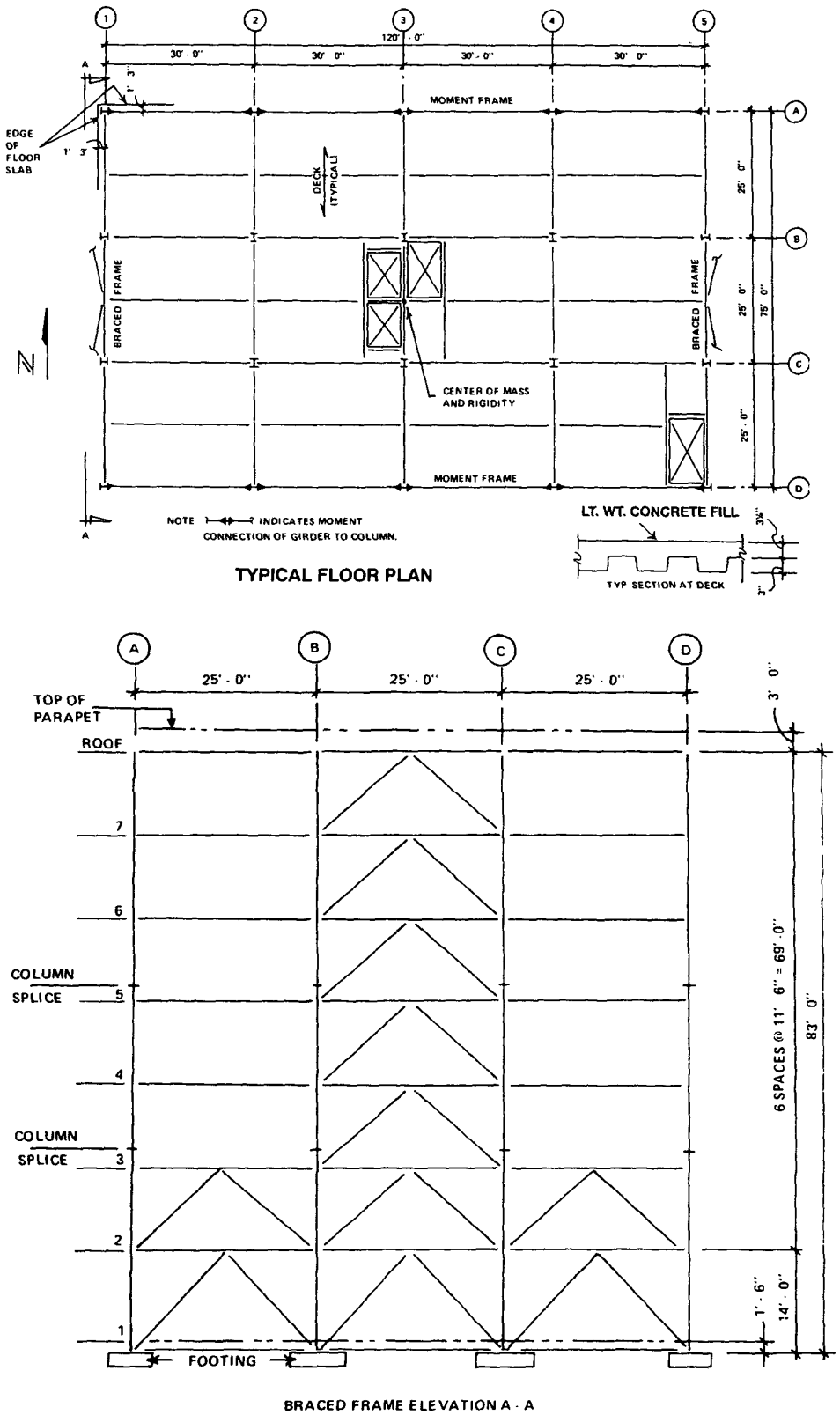

Figure 1
Plan and Elevation

SECTION B. NORTH-SOUTH SEISMIC FORCES

1. Seismic Formulas

$V = \left(\frac{ZIC}{R_w}\right) W$ 1994 UBC Chapter 16 Formula (28-1)

$C = \frac{1.25\ S}{T^{2/3}}$ UBC (28-2)

Z = 0.40 per UBC Table No. 16-I
I = 1.00 per UBC Table No. 16-K
R_w = 9 per UBC Table No. 16-N
S = 1.2 per UBC Table No. 16-J

Thus,

$C = \frac{(1.25)(1.2)}{T^{2/3}} = \frac{1.5}{T^{2/3}}$

$V = \frac{(0.40)(1.00)}{9}(C)W = \mathbf{(0.044)(C)W}$

Hence, we must now determine the building period by a conservative approximate method in order to proceed further.

2. Period per Method A

$T = C_t (h_n)^{3/4}$ UBC (28-3)

C_t=0.020 (for all buildings)

h_n=83.0 ft.

$T=0.020\ (83.0)^{3/4}=(0.020)(27.5)$

T=0.55 seconds

Note:
A larger value of T would result in using Method B. But this method can not be used until frame sizes are determined. However, the C value determined by Method B can **not** be less than 80 percent the value obtained by using Method A. Thus, the possible reduction in braced frame size using the period from Method B would not be large in most cases (unless drift controlled).

3. Design Base Shear & Distribution

$C = \frac{1.5}{T^{2/3}} = \frac{1.5}{(0.55)^{2/3}} = \frac{1.5}{0.67}$

C = 2.23 < 2.75 O.K.
(The value of C need not exceed 2.75)

V = (0.044)(C)W=(0.044)(2.23)W = 0.098W

W_{FL} = (122.5x77.5)(.085)+(400x11.5)(.015)=874 kips
W_{RF} = (122.5x77.5)(.067)+(400x8.75)(.015)=687 kips
W = 6(874) + 687 = 5,930 kips (total dead load)

V=0.098 W=(0.098)(5,930)

V=580 kips (total lateral force)

This base shear will be used for determining the strength **and** stiffness of the members of the braced frames.

In general, drift requirements will not govern the size of members for a steel braced frame, where allowable drift per Section 1628.8.2 of the 1994 UBC is (for T<0.7 seconds):

Δ ALLOW= $\left(\frac{0.04}{R_w}\right)$ (Story Height)

or (0.005) (Story Height), whichever is smaller

$\left(\frac{0.04}{R_w}\right) = \left(\frac{0.04}{9}\right) = \underline{0.0044 < 0.005}$

Thus, 0.0044 governs for drift

Now distributing this base shear of 580 kips over the height of the building:

The total lateral force is distributed over the height of the building in accordance with UBC Chapter 16 Formulas (28-6), (28-7) and (28-8). See Figure 2.

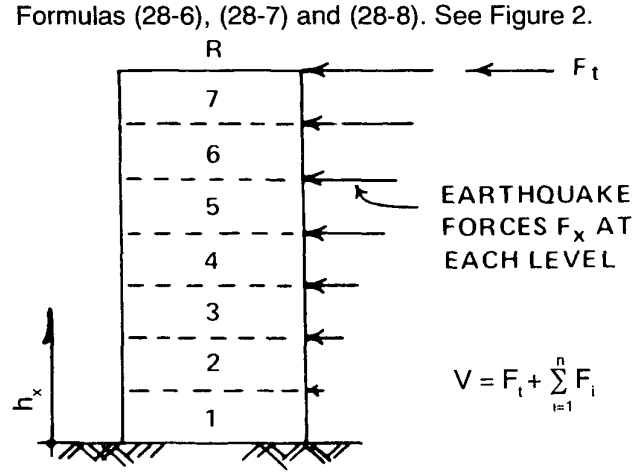

Figure 2
Distribution of Earthquake Forces over Height of Building.

Since $T \leq 0.70$, $F_t = 0$ Per UBC Section 1628.4.

$$F_x = \frac{(V - F_t)\, w_x h_x}{\sum_{i=1}^{n} w_i h_i} = \frac{(580) w_x h_x}{\sum_{i=1}^{n} w_i h_i}$$

See Table 1 for distribution of lateral forces over the height of the building.

Table 1

Floor Level	h_x (ft)	w_x (kips)	$w_x h_x (10^{-2})$	$\frac{w_x h_x}{\sum w_i h_i}$	F_x (kips)	V_x (kips)
R	83.0	687	570	0.203	118	—
7	71.5	874	625	0.222	129	118
6	60.0	874	524	0.187	108	247
5	48.5	874	424	0.151	87	355
4	37.0	874	324	0.115	67	442
3	25.5	874	222	0.079	46	509
2	14.0	874	122	0.043	25	555
1	—	—	—	—	—	580
$\sum$	—	—	2811	1.000	580	—

a. Forces and shears to determine sizes and drift of frames, and overturning at base of building. (Maximum drift=0.0044.) No increase is required for design of the chevron bracing as is required for standard ordinary braced frames per Section 2211.8.

4. Distribution of Seismic Forces:

Although the centers of mass and rigidity coincide, UBC Section 1628.5 requires designing for a minimum torsional eccentricity, e, equal to 5% of the building dimension perpendicular to the direction of force.

$$e = (0.05)(120) = 6.0 \text{ ft.}$$

Both the moment frames and the braced frames will resist this torsion. Due to the braced frames being much stiffer than moment frames, the relative rigidities are **assumed** as follows:

$$R_a = R_d = 1.00; \quad R_1 = R_5 = 4.00$$

Shear distributions in N-S direction:

$$V_{1,x} = (R_1)\left[\frac{V_x}{\sum R_{N\text{-}S}} \pm \frac{(V_x e)(d)}{\sum R_y d^2}\right] = V_{5,x}$$

where

d = Distance from frame to center of rigidity

$R_{N\text{-}S}$ = Rigidity of those frames extending in the north-south direction

R_y = Rigidity of a braced or moment frame, referred to that frame on column line y

V_x = Total earthquake shear on building at story x

$V_{y,x}$ = Earthquake shear on a braced or moment frame referred to that frame on column line y at story x

$$\sum R_{N\text{-}S} = 2(4.00) = 8.00$$

$$\sum R_y d^2 = 2(1.00)(37.5)^2 + 2(4.00)(60.0)^2 = 31{,}600$$

$$V_{1,x} = (4.00)\left[\frac{V_x}{8.00} \pm \frac{(V_x \times 6.00)(60.00)}{31{,}600}\right]$$

$$= (4.00)\,[0.125V_x + 0.011V_x]$$

$$\mathbf{V_{1,x} = 0.545V_x = V_{5,x}}$$

SECTION C. BRACING CONFIGURATION

Possible bracing systems that might be utilized are indicated using chevron type bracing (X bracing, V bracing, etc. can also be used):

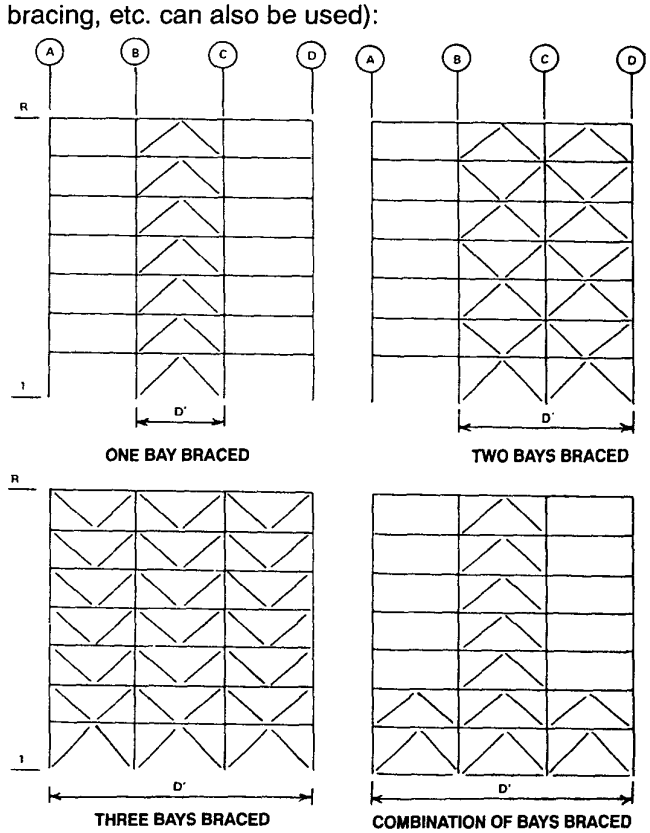

Figure 3

An important design consideration in selecting bracing system is over-turning due to earthquake forces. Overturning moments are as shown in Table 2.

Table 2 Earthquake Overturning Moments

Floor Level	V_x (kips)	Story Height $= h_x$ (ft)	$V_x h_x$	Moment $M_x = \sum V_x h_x$ (kips-ft.)
7	118	11.5	1360	1360
6	247	11.5	2840	4200
5	355	11.5	4080	8280
4	442	11.5	5080	13,360
3	509	11.5	5850	19,210
2	555	11.5	6380	25,590
1	580	14.0	8120	33,710
$\sum$	—	—	33,710	33,710

Overturning moment is distributed to the frames in the same proportion as the shears:

$$\mathbf{M_{1,x} = M_{5,x} = 0.545 M_x}$$

where

M_x = total earthquake moment on building at story x

$M_{y,x}$ = Earthquake moment on a braced frame, referred to that frame on column line y at level x

$M_{1,1} = M_{5,1} = (0.545)(33{,}710) =$ **18,400 kip-ft** (at base)

The overturning moment must be resisted by the dead load of the braced portion of the frame. In accordance with Section 1631.1 of the UBC, only 85 percent of the dead load can be used (to account for vertical seismic uplift forces acting concurrently with the lateral seismic forces). Consider the following cases at the base of the frames shown in Figure 3.

1. One Bay Braced:

$M_{1,1} = M_{5,1} = 18{,}400$ kip-ft

Dead load of columns on line B and C:

Roof	= (407)(0.067)	=	27 kips
6 Floors	= 6(407)(0.085)	=	208
Curtain Wall	= (1800)(0.015)	=	27
Footing	=		30
	$P_B = P_C =$		292 kips

$W_{DL} = 2(292) = 584$ kips

$M_R = W_{DL}\,(D'/2)$

where:

D' = Width of a braced frame at base

M_R = Dead load resisting moment of a frame

W_{DL} = Dead load of a braced frame

$M_R = (584)(25/2)(0.85)$

$= 6{,}200 < 18{,}400$ kip-ft N.G.

Overturning exceeds resisting moment. This indicates that the frame is unstable unless the resisting moment is increased by using caissons, piles, or other means which will increase the dead load of the braced portion of the frame.

2. Two Bays Braced:

By comparison with one bay braced, the frame would be unstable unless caissons, etc., are used.

3. Three Bays Braced:

$M_{1,1} = M_{5,1} = 18{,}400$ kip-ft

Dead load of columns on lines A, B, C, and D:

$W_{DL} = 2(292) + 2(191) = 966$ kips

$M_R = (966)(75.0/2)(0.85) = 30{,}800 > 18{,}400$ kip-ft O.K.

This frame is stable without utilizing caissons; however, to reduce the number of braced frame members and connections, the "Combination of Bays Braced" framing system might be used (see Figure 3). This system will spread the overturning out to the base in the same way as the "Three Bays Braced" system, but more efficiently. However, this framing system would require a Dynamic Analysis in accordance with UBC Section 1627.8.3, Item 2, due to the vertical irregularity.

PART II — CHEVRON BRACING DESIGN

This portion of the booklet illustrates the seismic design of a Special Concentrically Braced Frame (SCBF) using Chevron Bracing. Both the design of members and connections are described.

It is assumed that the "One Bay Braced" system will extend the full height of the building.

Wide flange members are indicated for the braces, but in lieu of these wide flange members other members such as tubes, pipes or double angles could be employed. The members of the braced frame are ASTM A36 material, but other materials such as ASTM A572 Grade 50 and ASTM A500 could be utilized in accordance with UBC Section 2211.4.1. Also, ASTM A490-SC in lieu of ASTM A325-SC bolted connections may be employed, especially if the loads are quite large.

SECTION D. ANALYSIS OF BRACED FRAMES

1. Design of Braced Frame Members Using Chevron Bracing:

Design of the frame will be limited to 5th floor girder, 3rd to 5th floor columns (one tier), and 4th story braces. Thus, the analysis will be limited to these portions of the braced frame.

2. Forces Due to Earthquake Loading (See Figure 4A)

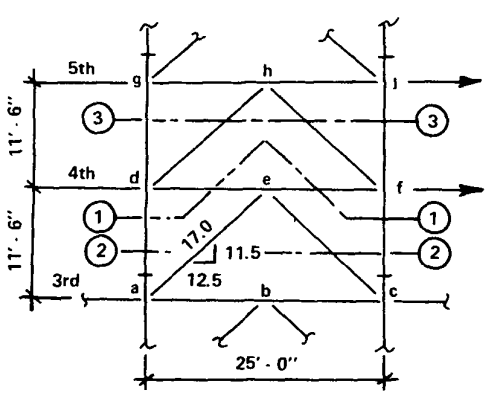

PARTIAL ELEVATION

(A)

Since $V_{1,x} = V_{5,x} = 0.545V_x$, the shears at the 3rd and 4th stories are:

$$V_{1,4}=V_{5,4}=(0.545)(442)=241 \text{ kips}$$

$$V_{1,3}=V_{5,3}=(0.545)(509)=277 \text{ kips}$$

Overturing moment at the 4th floor is:

$$M_{1,4}=M_{5,4}=(0.545)(13,360)=7,280 \text{ kip-ft}$$

At Section 1-1:

Taking moments about point f and solving for the axial force in member ad:

$$\sum M_f = 0 = 7,280-(25.0)(P_{ad})$$

$$P_{ad} = 7,280/25.0 = 290 \text{ kips}$$

$$P_{cf} = -290 \text{ kips}$$

At Joint e:

$$\sum F_y = 0 = -\left(\frac{11.5}{17.0}\right)(P_{ae}) - \left(\frac{11.5}{17.0}\right)(P_{ce})$$

$$P_{ae} = -P_{ce}$$

By taking $\sum F_x = 0$, it can be shown that

$$P_{de} = -P_{ef}$$

At Section 2-2:

$$\sum F_x = 0 = 277 - \left(\frac{12.5}{17.0}\right)(P_{ae}) + \left(\frac{12.5}{17.0}\right)(P_{ce})$$

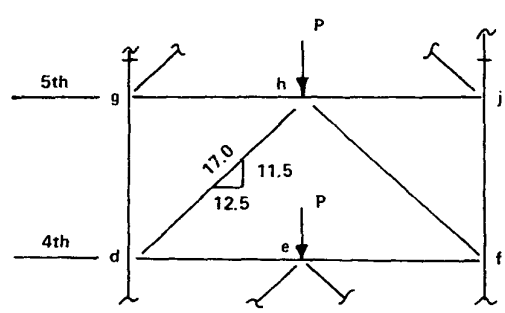

PARTIAL ELEVATION

(B)

Figure 4

Since $P_{ae} = -P_{ce}$

$$277 = 2\left(\frac{12.5}{17.0}\right)(P_{ae})$$

$$P_{ae} = 188 \text{ kips}$$

$$P_{ce} = -188 \text{ kips}$$

At Section 3-3:

$$\sum F_x = 0 = 241 - \left(\frac{12.5}{17.0}\right)(P_{dh}) + \left(\frac{12.5}{17.0}\right)(P_{fh})$$

$$P_{dh} = 164 \text{ kips}$$

$$P_{fh} = -164 \text{ kips}$$

At Section 1-1:

$$\sum F_x = 0 = 277 + P_{de} - P_{ef}$$

Since $P_{de} = -P_{ef}$

$$P_{de} = -139 \text{ kips}$$

$$P_{ef} = 139 \text{ kips}$$

3. Forces Due to Vertical Loading (See Figure 4B)

P = Floor + Curtain Wall
= (16.25 x 12.5)(0.082 + 0.048) + (11.5 x 12.5)(0.015) = 28.6 kips

Note: 0.082 is floor dead load and 0.048 is reduced live load.

At Joint h:

$$\sum F_y = 0 = -28.6 - \left(\frac{11.5}{17.0}\right)(P_{dh}) - \left(\frac{11.5}{17.0}\right)(P_{fh})$$

From $\sum F_x = 0$ along Sect. 1-1 and then Joints d and f, it can be shown that $P_{dh} = P_{fh}$. Thus,

$$28.6 = -2\left(\frac{11.5}{17.0}\right)(P_{dh})$$

$$P_{dh} = -21.1 \text{ kips}; \quad P_{fh} = -21.1 \text{ kips}$$

At joint d:

$$\sum F_x = 0 = \left(\frac{12.5}{17.0}\right)(P_{dh}) + P_{de}$$

$$P_{de} = -\left(\frac{12.5}{17.0}\right)(-21.1) = 15.5 \text{ kips}$$

SECTION E. DESIGN OF CHEVRON BRACES (4TH STORY)

$P_T = P_E + P_V$
where:

P_E = Axial force due to earthquake load which does not need to be increased by a factor of 1.5 for chevron bracing, based on UBC Section 2211.9.4.1
P_V = Axial force due to vertical load
P_T = Axial force due to total load

P_E = 164 kips
P_V = –21 kips
P_T = –164–21 = –185 kips
or P_T = 164 + 0
= 164 kips (neglecting vertical load)

Using theoretical length of brace, rather than the actual (somewhat smaller) length:

$$(Kl)_y = (1.0)(17.0) = 17.0 \text{ ft}$$

Taking one-third increase on brace capacity per UBC Section 1603.5 for seismic forces:

P_{equiv} = - 185/1.33 = -139 kips (Compression)
or
P_{equiv} = + 164/1.33 = +123 kips (Tension)

For brace size, it can be shown that a W10x39 is adequate to resist the seismic forces and meet the compactness criteria, but it is **not** adequate from the standpoint of effective net section if holes are located in the flanges of the brace, per 1994 UBC Chapter 22 Formula (11-6). Thus, a W10x39 does not have adequate fracture resistance through the net section.

Therefore, a W10x45 is selected as a possible brace size. (It will later be shown that the size of the brace should not be selected too large since it would have a very adverse effect on the size of the girder utilized with chevron bracing.)

Try W10x45 and $(Kl)_y$ = 17.0 feet

P_{cap}=170 kips per AISC Manual, p. 3-30

170 > 139 O.K.

Per UBC Section 2211.9.2.1, $\frac{Kl}{r} \le \frac{1{,}000}{\sqrt{F_y}}$

$$\frac{1{,}000}{\sqrt{F_y}} = \frac{1{,}000}{\sqrt{36}} = 167 \text{ Max.}$$

$$\left(\frac{Kl}{r}\right)_y = \frac{(1.0)(17.0)(12)}{2.01} = 102 < 167 \quad \text{O.K.}$$

Per UBC Section 2211.9.2.4, width-thickness ratios of brace must comply with requirements for compact members as defined by UBC Chapter 22, Division IX, Table B5.1.

$$\left(\frac{b}{t}\right)_{\text{ALLOW FLG}} \leq \frac{65}{\sqrt{F_y}} = \frac{65}{\sqrt{36}} = 10.8$$

$$\left(\frac{b}{t}\right) = \left(\frac{8.02}{2}\right)\left(\frac{1}{0.62}\right) = 6.5 < 10.8 \quad \text{O.K.}$$

(note that b is now defined as one-half the flange width)

$$\left(\frac{d}{t}\right)_{\text{ALLOW WEB}} \leq \frac{257}{\sqrt{F_y}}, \text{ where } \frac{f_a}{\sqrt{F_y}} > 0.16$$

$$\frac{257}{\sqrt{36}} = 43$$

$$\left(\frac{d}{t}\right) = \left(\frac{10.10}{0.35}\right) = 29 < 43 \quad \text{O.K.}$$

AISC Manual, Ninth Edition, Page 1-31 also indicates that these ratios are met by a W10x45.
Thus, it is compact.

Use W10x45 Brace

Note: Since connection to brace is bolted, check must also be made on the effective net area when the brace is in tension, as done in Section H, "Connection Design of Brace to Girder."

SECTION F. DESIGN OF GIRDER (5TH FLOOR)

Per UBC Section 2211.9.4, many requirements are imposed on the girder when using chevron bracing, namely:

(i) Girder must be continuous between columns.

(ii) Girder must be capable of supporting gravity loads presuming bracing deleted.

(iii) Girder must have the **strength** to support gravity loads and maximum unbalanced forces in the bracing.

(iv) Both girder flanges shall be laterally supported at the point of intersection of the chevron braces

In general, these requirements are easily achieved **except** for the requirement (iii). This requirement is imposed to assure the **post-buckling capacity** of the braced frame system. That is, if the compression brace buckles under very large seismic loads (loads larger then those specified by the UBC), the girder is so strong that it can resist the very large bending moment that is imposed upon it by a chevron brace acting in tension, with very little load in the other chevron brace acting in compression. This condition is specified as follows:

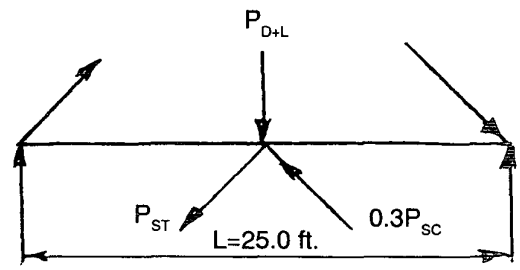

Figure 5
Reactions on Girder

To simplify calculations, use full dead and live load, P_{D+L} = 28.6 kips (see SECTION D).

Both P_{st} and P_{sc} are defined by UBC Section 2211.4.2.

For a W10x45 Brace

$P_{st} = (A)(F_y) = (13.3)(36.0) = 479$ kips

$P_{sc} = (1.7)(A)(F_a) = (1.7)(170) = 289$ kips
$0.3\ P_{sc} = (0.3)(289) = 87$ kips

The following loading results on the girder:

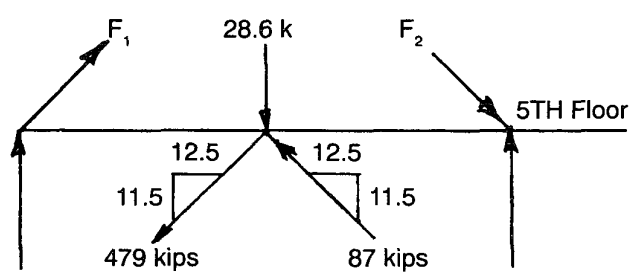

Figure 6

Thus, the net downward force is:

$$P_{net} = 28.6 + (479)\left(\frac{11.5}{17.0}\right) - (87)\left(\frac{11.5}{17.0}\right) = 294 \text{ kips}$$

$$M_v = \frac{(P_{net})(L)}{4} = \frac{(294)(25.0)}{4} = 1{,}840 \text{ kips-ft}$$

Neglecting axial load, approximate size of required girder is to be based on **flexural strength** capacity.

$M_S = (Z_{REQD})(F_y) = (1{,}840)(12)$

$Z_{REQD} = \frac{(1{,}840)(12)}{36} = 613 \text{ in}^3$

For W36x160, Z = 624 in³ > 613 O.K.

But to account for axial load, try W36x182

If braces above 5th Floor remain intact,

$F_1 \approx F_2 = \frac{479 + 87}{2} = 283$ kips (See Fig. 6)

Thus, axial force in girder = $\pm(283)\left(\frac{12.5}{17.0}\right) = \pm 208$ kips

Using the interaction equation (approximate) for strength of girder:

$$\frac{P}{P_{sc}} + \frac{M_v}{M_s} \leq 1.00$$

P = 208 kips and M = 1,840 kip-ft.

$P_{sc} = 1.7\ F_a A$, and girder is braced at mid-span

$\left(\frac{Kl}{r}\right)_y = \frac{(1.0)(12 \times 12.5)}{2.55} = 59$

F_a = 17.5 ksi, AISC Manual, p. 3-16

$P_{sc} = (1.7)(17.5)(53.6) = 1{,}595$ kips

$M_s = (F_y)(Z) = \frac{(36.0)(718)}{12} = 2{,}154$ kip-ft.

Thus, $\frac{208}{1{,}595} + \frac{1{,}840}{2{,}154} = 0.13 + 0.85 = 0.98$ O.K.

Use W36x182 Girder

SECTION G. DESIGN OF COLUMN (3RD TO 5TH FLOOR)

$P_T = P_E + P_V$

Using loads at 3rd Story:

$P_E = \pm 290$ kips

P_V = Roof + 4 Floors + Curtain Wall

$= (25.0 \times 16.25)(0.067 + 0) + 4(25.0 \times 16.25)(0.085 + 0.020) + (25.0 \times 60.5)(0.015)$

$P_V = 27 + 171 + 23 = 221$ kips (Compression)

$P_T = -290 - 221 = -511$ kips

$P_{EQUIV} = \frac{-511}{1.33} = -384$ kips

$(Kl)_x = (Kl)_y = (1.0)(11.5) = 11.5$ feet

Try W14x82

$\left(\frac{Kl}{r}\right)_y = \frac{(1.0)(11.5)(12)}{2.48} = 56$; Thus, $F_a = 17.8$ ksi

$f_a = \frac{P_{EQUIV}}{A} = \frac{384}{24.1} = 15.9$ ksi < 17.8 O.K.

However, in accordance with UBC Section 2211.5.1, must check column strength for maximum anticipated seismic forces, utilizing the member strengths specified by UBC Section 2211.4.2:

$P = 1.0\ P_{DL} + 0.7\ P_{LL} + 3\left(\frac{R_w}{8}\right) P_E$

$P \approx 221 + 3\left(\frac{9}{8}\right)(290) = 1{,}200$ kips

$P_{sc} = 1.7\ F_a A = (1.7)(17.8)(24.1) = 730$ kips

730 < 1,200 N.G.

Try W14x132

$\left(\frac{Kl}{r}\right)_y = \frac{(1.0)(11.5)(12)}{3.76} = 37$, $F_a = 19.42$ ksi

$P_{sc} = 1.7\ F_a A = (1.7)(19.42)(38.8) = 1{,}280$ kips

1,280 > 1,200 O.K.

Use W14x132 Column

SECTION H. CONNECTION DESIGN OF BRACE TO GIRDER (5TH FLOOR)

Per UBC Section 2224.1 design connections using high-strength slip-critical bolts, since these are required for joints subject to significant load reversal. (Per AISC Manual p. 5-270.)

1. Design Criteria

Using the force criteria of UBC Section 2211.9.3.1, the connections shall have the strength to resist the lesser of the following:

(i) The strength of the brace in axial tension, $P_{st} = F_y A$.

(ii) $3\left(\frac{R_w}{8}\right)$ times the force in the brace due to the prescribed seismic forces, in combination with gravity loads.

(iii) The maximum force that can be transferred to the brace by the system.

Use strength criteria for connection capacity per UBC Section 2211.4.2. Thus, for 1 in. ϕ A325-SC in single shear:
F_{CAP} = (1.7)(Allowable)
F_{CAP} = (1.7)(13.4) = 22.8 kips per bolt
(See AISC Manual p. 4-5)

Connection strength required for brace:

(i) $P_{1B} = (F_y)(A) = (36.0)(13.3) = 479$ kips

(ii) $P_{2B} = 3\left(\frac{R_w}{8}\right)(P_E + P_V) = 3(9/8)(185) = 624$ kips

(iii) P_{3B} = Unknown at this time

Hence, the smaller force = **479 kips (governs)**

2. Bolts to Brace W10x45

For brace connection, number of 1" ϕ A325-SC:

$n = \frac{479}{22.8} = 21.0$ bolts,

Use 24 - 1" ϕ A325-SC (10 bolts each flange and 4 bolts to web, based approximately on their areas)

Hence, connection is as shown in Figure 7.

Check effective net area of brace in accordance with UBC Section 2211.8.3.2, Formula (11-6).

$$\frac{A_e}{A_g} \geq \frac{1.2\alpha F^*}{F_u}$$

$$F^* = \frac{P_{1B}}{A} = \frac{479}{13.3} = 36.0 \text{ ksi}$$

Note: Please refer to addendum on Pg. 32 for information regarding steel yield & tensile strengths.

α = 1.00 (all load transferred across section)

$$\frac{A_e}{A_g} \geq \frac{(1.2)(1.0)(36.0)}{58.0} = 0.74$$

$A_e \geq (0.74)(A_g) = (0.74)(13.3) = 9.90$ sq. in.

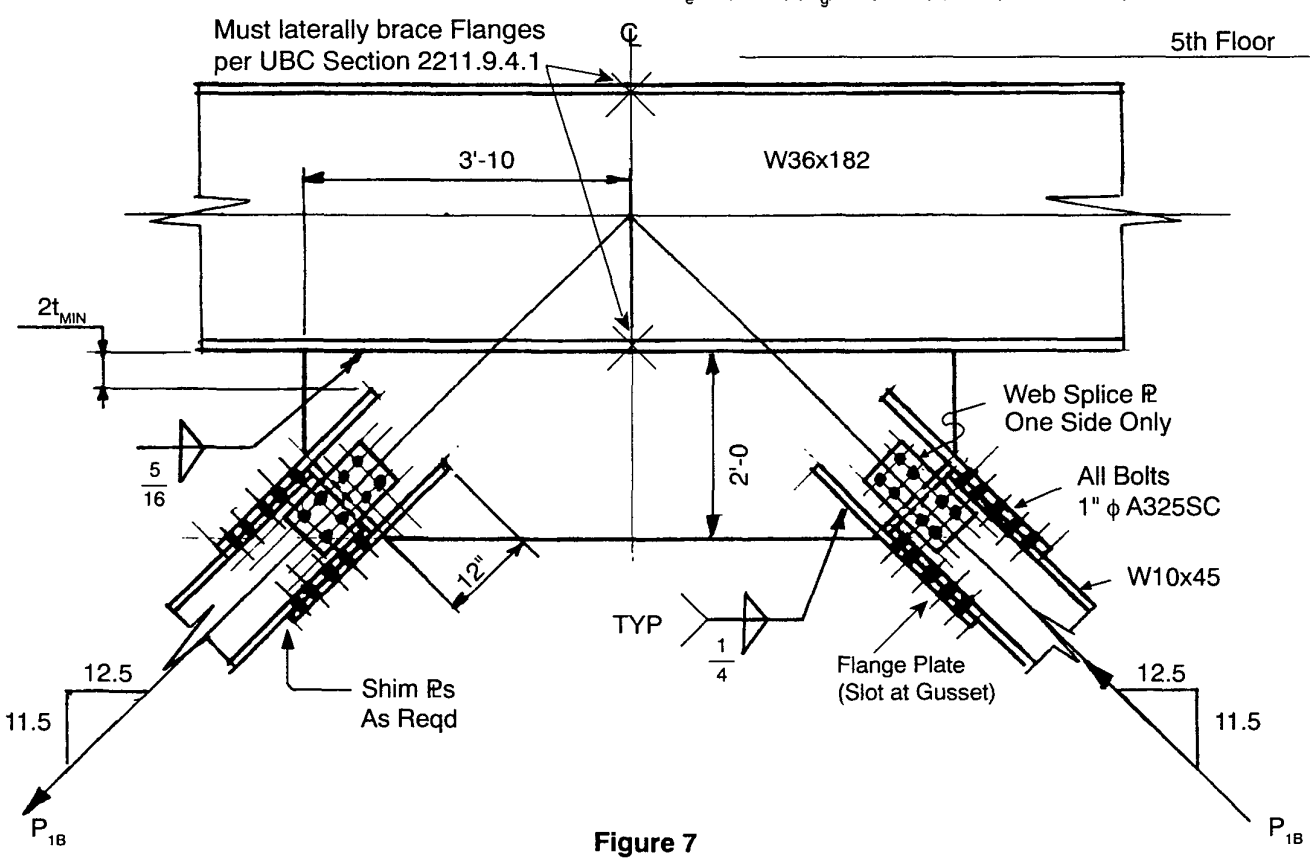

Figure 7
Brace to Girder Detail

$A_{eACTUAL}$ = Effective Net Area per UBC Section 2251, B3

$A_{eACTUAL} = A_n$ since both flanges and web connection transmit load

$A_n = A_{GROSS}$ – 4 holes in flanges
(do not need to deduct holes in web since the force in brace is much reduced at this location)

$A_n = 13.3 - (4)(0.62)(1.125) = 10.5$ sq. in.

$A_{e_{ACTUAL}} = 10.5 > 9.90$ O.K.

Use 1 in. ϕ Bolts to W10x45 Brace

3. Flange Plates

Design force using 10 bolts to each flange and 4 bolts to the web (all in single shear).

$P_{FLANGE} = \left(\frac{10}{24}\right)(P_{1B}) = \left(\frac{10}{24}\right)(479) = \pm 200$ kips

Try flange plate 10 inches wide by 1/2 in. thick; and based on strength capacity,
$P_{sc} = 1.7F_aA$ (for compression)
$r = 0.29\,t$ (based on $r = \sqrt{I/A}$ for plate)

$\frac{l}{r} \approx 3''/(0.29)(0.50) = 21$

$F_a = 20.5$ ksi per AISC Manual, p. 3-16
$P_{sc} = (1.7)(20.5)(10.0 \times 0.50) = 174$ kips < 200 N.G.

Thus, try flange plate 10 in. by 3/4 in.

$P_{sc} = 1.7\,F_aA$
$r = 0.29\,t$

$\frac{l}{r} \approx 3/(0.29)(0.75) = 14$, $F_a = 20.9$ ksi

$P_{sc} = (1.7)(20.9)(10.0 \times 0.75) = 266$ kips > 200 O.K.

Also, check tension strength capacity, including effective net section.

$P_{st} = F_yA$
$P_{st} = (36.0)(10.0 \times 0.75) = 270$ kips > 200 O.K.

Now check effective net area of plate in accordance with UBC Section 2211.8.3.2, Formula (11-6)

$$\frac{A_e}{A_g} \geq \frac{1.2\alpha F^*}{F_u}$$

$$F^* = \frac{200}{10.0 \times 0.75} = 26.7 \text{ ksi}$$

$\alpha = 1.00$ (all 200 kips transferred to plate)

$$\frac{A_e}{A_g} \geq \frac{(1.2)(1.00)(27.6)}{58.0} = 0.55$$

$A_e \geq (0.55)(A_g) = (0.55)(10.0 \times 0.75) = 4.14$ sq. in.

$A_{eACTUAL}$ = Effective Net Area per UBC Section 2251, B3
$= 10.0 \times 0.75 - (2 \times 1.125 \times 0.75) = 5.8$ sq in.
$A_{eMAX} = (0.85)(Ag) = (0.85)(10.0 \times 0.75) = 6.4$ sq. in.

Thus, 5.8 sq. in. governs for $A_{eACTUAL}$

$5.8 \geq 4.14$ O.K.

Thus, there is no possibility of failure (rupture) through plate section at holes.

Use Flange Plates 10 x 3/4-in.

For weld on each flange plate, use 1/4-in. fillet welds to gusset plate (this is minimum weld size for 3/4-in. plates).

$F_{CAP\ WELD}$ = (1.7)(Allowable) per UBC Section 2211.4.2.
$= (1.7)(4 \times 0.928) = 6.3$ kips per inch
$l_{WELD} = 200/(4)(6.3) = 8.0$ in.
4 welds per plate

But to drag load adequately into gusset plate in order to reduce localized stresses, including those associated with tearout,

Use 1/4-in. x 12 in. long welds (4 per plate)

4. Web Plate

$P_{WEB} = \left(\frac{4}{24}\right)(P_{1B}) = \left(\frac{4}{24}\right)(479) = 80$ kips

Try web plate 7 inches wide by 1/2-in. thick, and based on strength capacity,
$P_{sc} = 1.7\,F_aA$

$\frac{l}{r} = \frac{4}{(0.29)(0.50)} = 28$, Fa = 20.0 ksi

$P_{sc} = (1.7)(20.0)(7.0 \times 0.50) = 119$ kips > 80 O.K.

$P_{st} = F_yA = (36.0)(7.0 \times 0.50) = 126$ kips > 80 O.K.
(May wish to check for effective net area also.)

Use Web Plate 7 x 1/2-in.

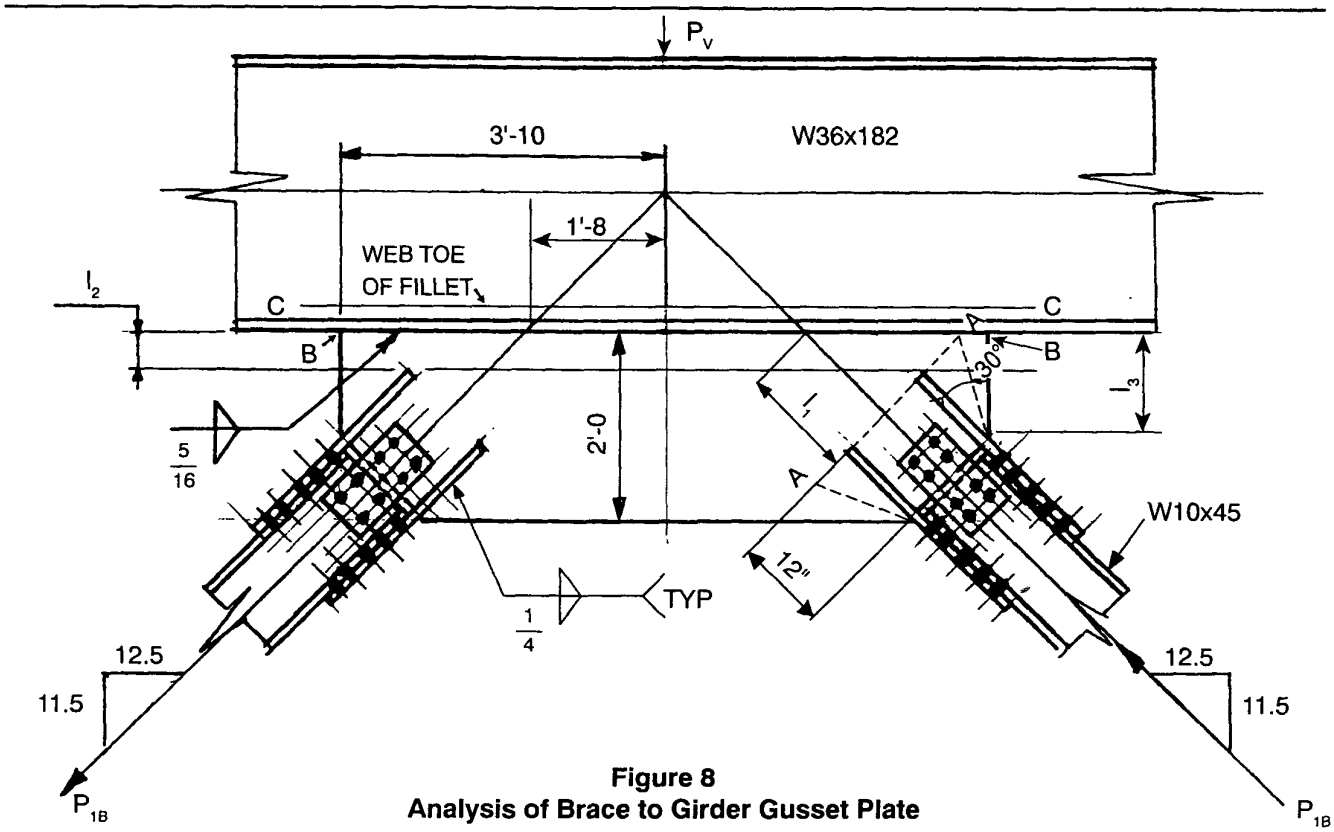

Figure 8
Analysis of Brace to Girder Gusset Plate

Also, check bearing capacity of bolts on web of W10 x 45 brace (t = 0.35 in.)

Since bolt spacing = 3d and edge distance is at least 1-1/2 d, and two or more bolts in line of force:

$F_p = 1.2\ F_u$ per UBC Section 2251, J3.7

For **strength** capacity,

$F_{pu} = (1.7)(1.2F_u) = (1.7)(1.2 \times 58.0) = 118$ ksi

$P_{CAP\ BEARING} = (F_{pu})(A_p) = (118)(1.00 \times 0.35) = 41.4$ kips

41.4 > 22.8 kips shear capacity

Bolt Bearing Capacity O.K.

5. Gusset Plate

The analysis of the gusset plate to the girder will be based on Whitmore's Method and the Method of Sections using beam formulas. Capacities will be based on strength design capacity. See Fig. 8.

a. Using Whitmore's Method, based on compressive force along Section A-A (Figure 8).
Effective width = 11.5 + 2 (12 x tan 30°) = 25.3 in.
resisting P_{1B} = 479 kips

Try 3/4 Plate for Gusset

$\frac{kl}{r} = (0.80)(16)/(0.29)(0.75) = 59,\ F_a = 17.5$ ksi

$P_{sc} = (1.7)(F_a)(A) = (1.7)(17.5)(25.3 \times 0.75) = 558$ kips > 479 O.K.

3/4-in. Plate O.K.

b. Using **Method of Sections** along Section B-B, where the force $P_{1B} = F_y A$ from both braces is assumed to be acting in the same direction concurrently.
(P_{1B} = 479 kips)
Length of Section B-B = 7'-8" = 92 in.
f_v = shear stress along B-B

$$f_v = \frac{(2\ P_{1B})\left(\frac{12.5}{17.0}\right)}{(0.75 \times 92)} = \frac{(2)(479)(0.74)}{69} = 10.3 \text{ ksi}$$

$F_v = 0.55\ F_y = 19.8$ ksi > 10.3 O.K.

Checking bending and axial stress along B-B
f_b= bending stress along B-B (bottom of girder)

$$M_{B\text{-}B} = (P_{1B} + P_{1B})\left(\frac{11.5}{17.0}\right)(20")$$

$$= (479 + 479)\left(\frac{11.5}{17.0}\right)(20") = 12{,}960 \text{ kip in.}$$

$$f_b = \pm \frac{12{,}960}{(0.75)(92.0)^2} = \pm 8.2 \text{ ksi}$$

f_a = axial stress along B-B

$$f_a = \frac{P_v}{A} = \frac{-28}{(0.75)(92.0)} = -0.4 \text{ ksi}$$

$f_a \pm f_b = -0.4 \pm 8.2$

$= -8.6$ ksi and $+7.8$ ksi

Allowable stress depends on $\frac{kl}{r}$ of plate between lateral supports, where $l \approx 14$ in.

$\frac{kl}{r} = (0.80)(14)/(0.29)(0.75) = 51 \qquad F_a = 18.3$ ksi

$P_{sc} = (1.7)(F_a) = (1.7)(18.3) = 31.1$ ksi > 8.6 O.K.

3/4-in. Plate O.K.

c. Using **Method of Sections** along Section B-B, where the forces in the braces are taken as required in the criteria for the girder design; i.e.:

$P_{st} = 479$ kips
$0.3\ P_{sc} = 87$ kips

By inspection the stresses due to these loads are less than those investigated in Section H.5b, using $P_{1B} = 479$ kips.

3/4-in Plate O.K.

d. Check for **local web buckling** along Section C-C based on UBC Section 2251, K1.3 where for interior conditions:

$$\frac{R}{t_w\ (N+5k)} \leq (0.66\ F_y)(1.7)$$

For condition indicated,

$N + 5k = 92+5(2.13) = 103$ in.

With bearing distributed over this length and using the moment and axial load from Section H.5b, at the toe of the web fillet for the W36 x 182:

$$f_b = \frac{M_{B\text{-}B}}{t_w\ (N+5k)^2/4} + \frac{P_v}{t_w\ (N+5k)}$$

$$= \frac{12{,}960}{0.725(103)^2/4} + \frac{28}{0.725(103)}$$

$= 6.7 + 0.4 = 7.1$ ksi
$(0.66F_y)(1.7) = 40.8$ ksi > 7.1 O.K.

W36 x 182 O.K.

e. **Check for Rupture** (Tearout) per Figure 9

Based on UBC Section 2251, J4, Resistance to Tearout is as follows:

$F_v = 0.30$ Fu acting on net shear area

$F_t = 0.50$ Fu acting on net tension area

Increase by 1.7 for strength capacity

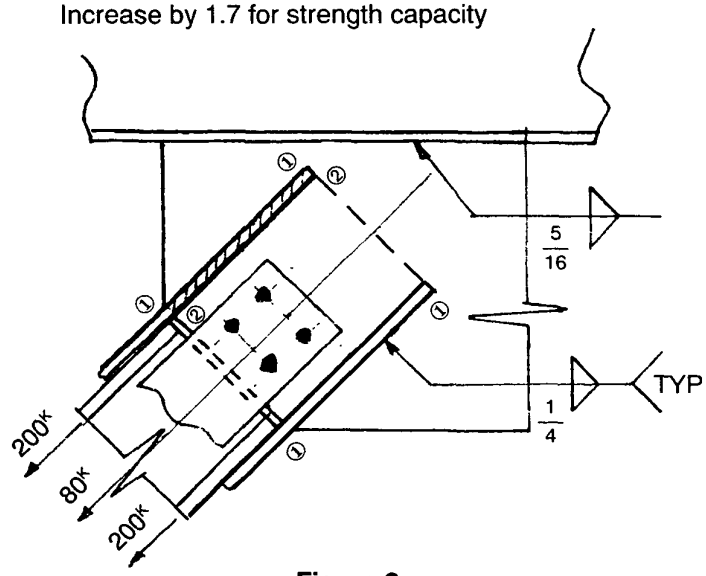

Figure 9
Rupture Surfaces

Along 1-1-1-1, as indicated in Figure 9. There are 2 shear areas and 1 tension area

$R_{to} = 1.7\ [2x0.75x12.0x0.30x58.0 + 1x0.75x11.5x.50x58.0]$

$R_{to} = 1.7\ [314 + 251] = 960$ kips > 480 O.K.

Along 1-1-2-2 (cross-hatched) there are 2 shear areas
$R_{to} = 1.7\ [2x0.75x12.0x0.30x58.0] = 533$ kips > 200 O.K.

3/4-in. Plate O.K.

f. **Weldment of Gusset Plate to Girder** (Both sides)
Worst loading condition is where $P_{1B} = F_y A$ from both braces acting concurrently, as indicated in Section H.5b.

$$f_H = \frac{(2P_{1B})\left(\frac{12.5}{17.0}\right)}{2L} = \frac{2(479)(0.74)}{(2)(92)}$$

$f_H = 3.9$ kips per inch

$$f_v = \pm \frac{(2P_{1B})\left(\frac{11.5}{17.0}\right)}{(2)(L^2)/4} - \frac{P_v}{2L}$$

$$f_v = \pm \frac{12960}{(2)(L^2)/4} - \frac{P_v}{2L}$$

$f_v = \pm 3.1 - 0.2 = 3.3$ kips per inch

$f_n = \sqrt{(3.9)^2 + (3.3)^2} = 5.1$ kips per inch

$n = \frac{5.1}{(0.928)(1.7)} = 3.2$ sixteenths = 1/4-in. weld

But since girder flange is 1 3/16-in. thick, minimum fillet weld size is 5/16-in.

Use 5/16-in. Fillet Welds (each side)

Based in the shear capacity of the two-sided weld versus the shear capacity of the plate, using E 70 electrodes and A36 plate, it can be shown (based on Allowable Stress Design) that:

$t_{MIN} = \frac{5.16D}{F_y}$, where D = weld size in sixteenths

t_{MIN} = minimum thickness of plate

$t_{MIN} = \frac{(5.16)(3.2)}{36.0} = 0.46"$

0.75 in. > 0.46 O.K. (3/4-in. gusset plate is adequate)

g. **Setback of Flange Plates**
In accordance with UBC Section 2211.9.3.3, where brace will buckle out-of-plane, stop flange plate at least 2 times gusset plate thickness from the bottom flange = l_2 (see Figure 8).

$l_2 = (2)(0.75) = 1$ 1/2-in.

6. Summary of Design of Brace to Girder Connection

Gusset Plate: (i) 3/4-in. thick x 92 in. long
(ii) 5/16-in. fillet weld to girder (each side)

Flange Plate: (i) 3/4-in. thick x 10 in. wide
(ii) 10 - 1 in. ϕ A325-SC bolts to brace
(iii) 1/4-in. fillet weld x 12 in. long to gusset plate (4 welds)

Web Plate: (i) 1/2-in. thick x 7 in. wide
(ii) [illegible] A325-SC bolts [illegible]

SECTION I. CONNECTION DESIGN OF BRACE AND GIRDER TO COLUMN (4TH FLOOR)

1. Design Criteria

Using the force criteria of UBC Section 2211.9.3.1, the connection shall have the strength to resist the lesser of the following:

(i) The strength of the brace in axial tension, $P_{st} = F_y A$.

(ii) $3\left(\frac{R_w}{8}\right)$ times the force in the brace due to the prescribed seismic forces, in combination with gravity loads.

(iii) The maximum force that can be transferred to the brace by the system.

For strength capacity of members and connections, use the capacities specified in UBC Section 2211.4.2 which states the following:

Flexure ..... $M_s = ZF_y$
Shear ..... $V_s = 0.55\ F_y\ dt$

Axial Compression ..... $P_{sc} = 1.7\ F_a A$
Axial Tension ..... $P_{st} = F_y A$

Full Penetration Welds ..... $F_y A$
Partial Penetration Welds .... 1.7 Allowable
Bolts and Fillet Welds ..... 1.7 Allowable

2. Analysis Method

Utilize the **"Uniform Force Method"** for the analysis method in accordance with the recommendations of the following AISC Manuals:

(i) "Load & Resistance Factor Design," Second Edition, "Volume II Connections," p. 11-17 thru 11-48 (1994).
(ii) "Volume II Connections," ASD 9th Edition/LRFD 1st Edition, p. 7-105 thru 7-170 (1992).

The two references are similar, except the first reference is more recent and easier to understand, even when using Allowable Stress Design.

The "Uniform Force Method" is based on selecting connection geometry such that moments do not exist on these connection interfaces:

(i) Gusset Plate to Girder
(ii) Gusset Plate to Column
(iii) Girder to Column

Thus, the bracing connection and free-body diagrams are as indicated along with the nomenclature in Figures 10, 11 and 12. Note that the shear plate is assumed slit horizontally (broken) along the girder flanges for analysis purposes.
It should be observed that the centroid locations, α and β, are located on a common point lying on the centerline of the braces.

Where:

e_b = one-half the depth of the beam, in.

e_c = one-half the depth of the column, in.

α = distance from face of column to the centroid of the gusset plate to girder connection, in.

β = distance from face of girder to the centroid of the gusset plate to column connection.

For the force distribution shown in the free-body diagrams to remain free of moments on the connection interfaces, the following expression must be satisfied:

$$\alpha - \beta \tan\theta = e_b \tan\theta - e_c$$

This equation can be derived simply from the definition of tan θ. Since α and β are the only variables, the designer must select values for them for which the identity is valid. Once α and β are determined, then the axial forces and shears can be determined from these equations:

$$V_c = \frac{\beta}{r}(P) \qquad H_c = \frac{e_c}{r}(P)$$

$$H_b = \frac{\alpha}{r}(P) \qquad V_b = \frac{e_b}{r}(P)$$

$$r = \sqrt{(\alpha + e_c)^2 + (\beta + e_b)^2}$$

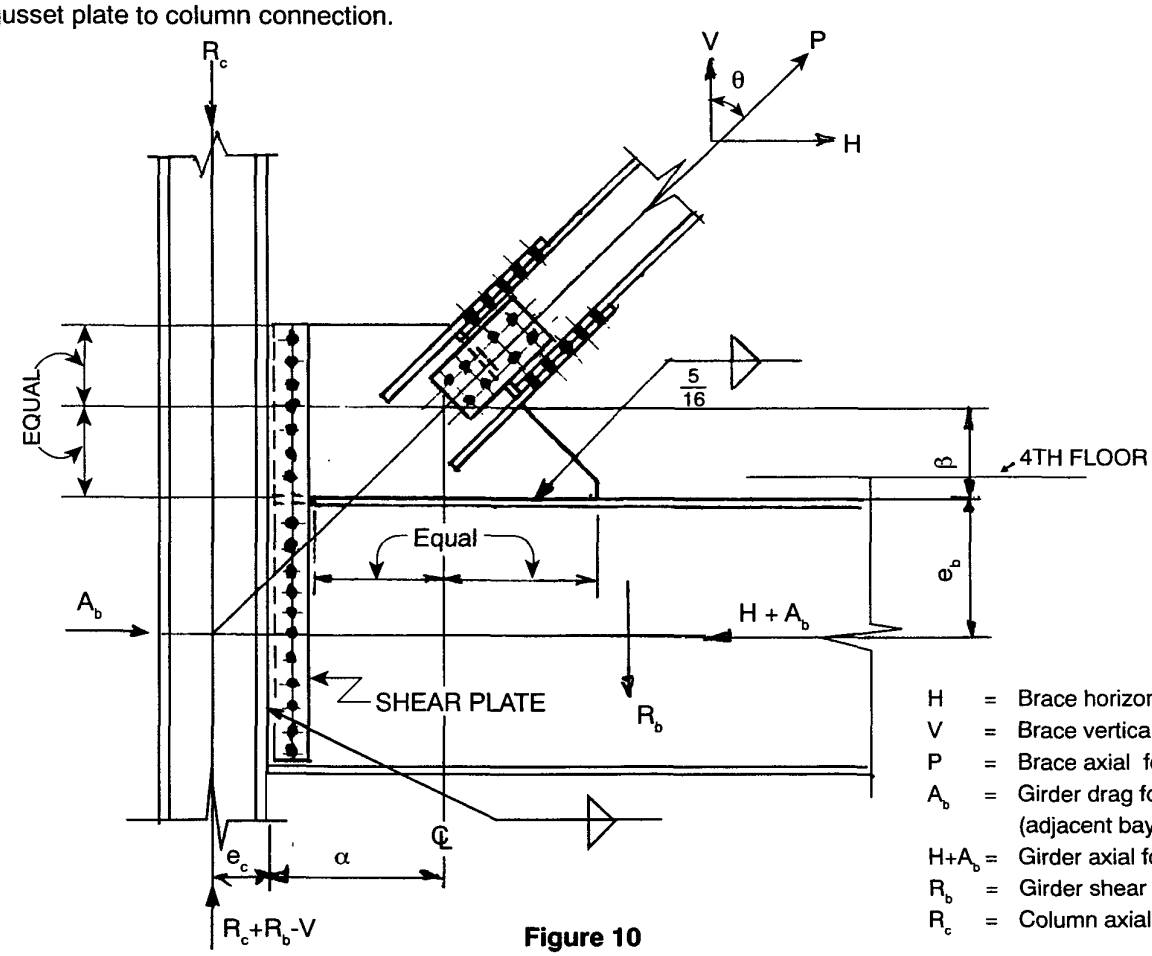

H = Brace horizontal force
V = Brace vertical force
P = Brace axial force
A_b = Girder drag force (adjacent bay)
$H+A_b$ = Girder axial force
R_b = Girder shear
R_c = Column axial force

Figure 10
Diagonal Bracing Connection and External Forces

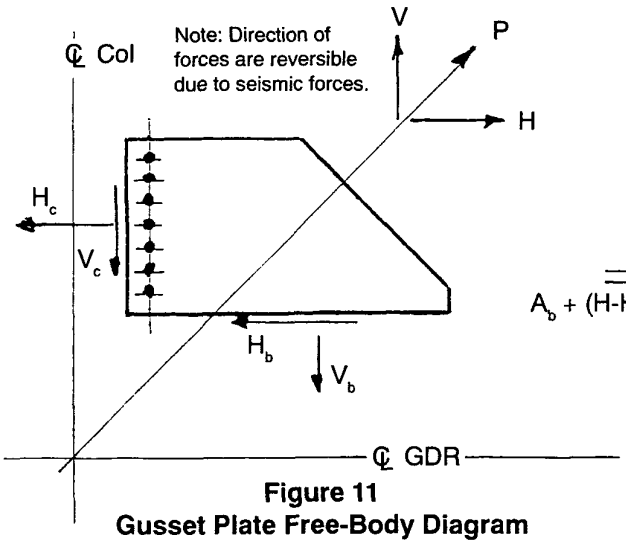

Figure 11
Gusset Plate Free-Body Diagram

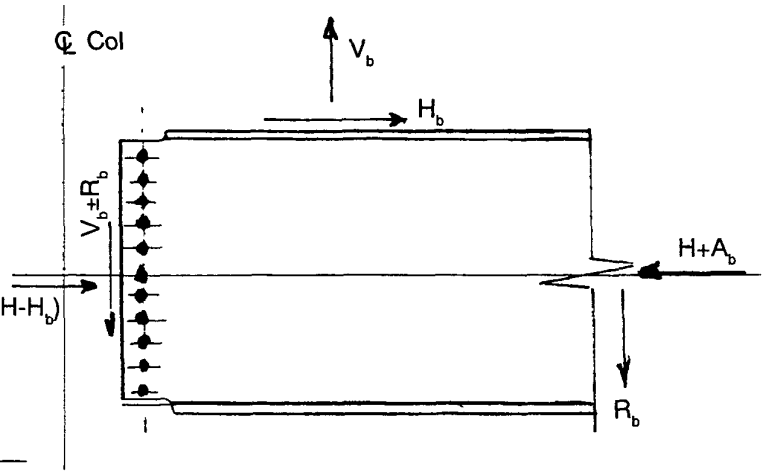

Figure 12
Girder Free-Body Diagram

Special Design Note:
For the gusset plate weldments directly to column or girder, increase weld size by 40 percent to provide necessary ductility. (See LRFD AISC Manual "Volume II Connections," p. 11-27).

3. Determining Gusset Plate Dimensions & Forces

See Figure 13

$\alpha = e_b \tan\theta - e_c + \beta \tan\theta$

$\tan\theta = \frac{12.5}{11.5} = 1.09$

$e_b = 18.2$ in.

$e_c = 7.2$ in.

After several trial solutions, set $\beta = 12.0$ in. as shown in Figure 13.

$\alpha = (18.2)(1.09) - 7.2 + 12(1.09)$

$\alpha = 25.7$ in.

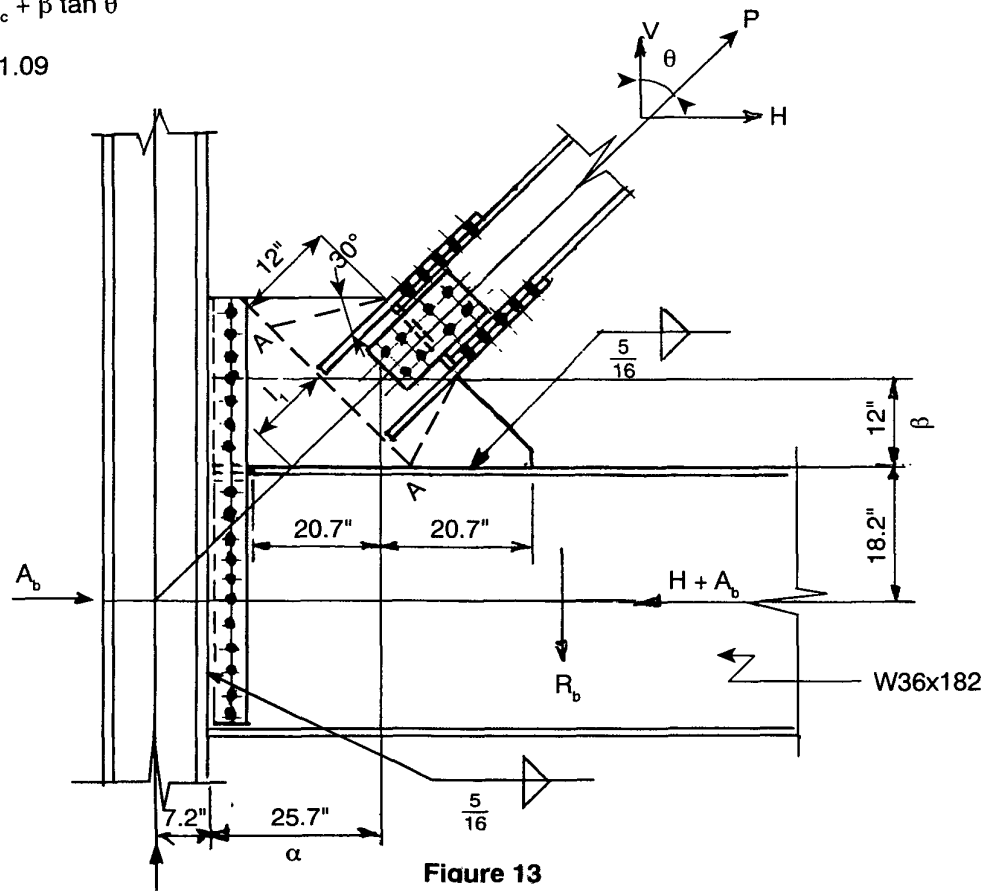

Figure 13

With 20.7 in. of welded connection to the left of centroid (25.7 - 5.0 = 20.7), extend gusset plate 20.7 in. to the right of centroid. Thus,
$\alpha = 25.7$ in. $= \alpha$

Thus, $r = \sqrt{(\alpha + e_c)^2 + (\beta + e_b)^2}$

$r = \sqrt{(25.7 + 7.2)^2 + (12.0 + 18.2)^2} = \sqrt{1{,}994}$

$r = 44.7$ in.

Connection strength required for brace:

(i) $P_{1B} = F_y A = (36.0)(13.3) = 479$ kips

(ii) $P_{2B} = 3\left(\frac{R_w}{8}\right)(P_E + P_V) = 3\left(\frac{9}{8}\right)(185) = 624$ kips

Hence, the smaller force = 479 kips governs (P = 479 kips).

The shears and axial forces are as follows:

$V_c = \frac{\beta}{r}(P) = \left(\frac{12.0}{44.7}\right)(479) = 129$ kips

$H_c = \frac{e_c}{r}(P) = \left(\frac{7.2}{44.7}\right)(479) = 77$ kips

$H_b = \frac{\alpha}{r}(P) = \left(\frac{25.7}{44.7}\right)(479) = 275$ kips

$V_b = \frac{e_b}{r}(P) = \left(\frac{18.2}{44.7}\right)(479) = 195$ kips

Checking values above based on free-body of gusset plate.

$\sum H=0$

$H = H_b + H_c = (P)\left(\frac{12.5}{17.0}\right) = 352$ kips

$H_b + H_c = 275 + 77 = 352$ kips O.K.

$\sum V=0$

$V = V_b + V_c = (P)\left(\frac{11.5}{17.0}\right) = 324$ kips

$V_b + V_c = 195 + 129 = 324$ kips O.K.

For drag load A_b in adjacent bay, assume that 50% of the seismic load applied at the 4th floor is equally dragged to each adjacent bay. Thus, using the loads from SECTION D,

$A_b = \frac{277-241}{2} = 18$ kips (drag load)

For vertical shear R_b in girder, assume braces below fourth floor are not adequately supporting girder; thus, $R_b = 28.6/2 = 14$ kips

4. Flange Plates, Web Plate and Gusset Plate

For design of flange and web plates, see "Connection Design of Brace to Girder (5th Floor)", Sections H.2, H.3 & H.4.

For gusset plate design, use Whitmore's Method assuming brace load is in compression, P = 479 kips, acting on Section A-A (Figure 13).

Try 3/4-in. plate thickness.

Effective width along A-A=b

$b = 11.5 + 2(12 \times \tan 30°) = 25.3$ in.

$f_a = \frac{P}{A} = \frac{479}{(0.75 \times 25.3)} = 25.2$ ksi

Base F_a capacity upon length $l_1 = 14$ in.

$\frac{kl}{r} = \frac{(0.80)(14)}{(0.29)(0.75)} = 51$, $F_a = 18.3$ ksi

$P_{sc} = (1.7)(F_a) = (1.7)(18.3) = 31.1$ ksi > 25.2 O.K.

Use 3/4-in. Gusset Plate

5. Gusset Plate to Girder Connection (Figure 14)

Note: Direction of forces are reversible

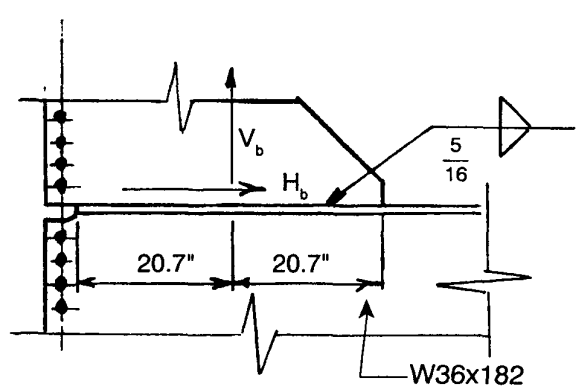

Figure 14
Partial Elevation of Connection

H_b= 275 kips, V_b = 195 kips (Figure 14)

For weld loads,

$$f_H = \frac{H_b}{(2)(41.4)} = \frac{275}{82.8} = 3.4 \text{ kips per in.}$$

$$f_V = \frac{V_b}{(2)(41.4)} = \frac{195}{82.8} = 2.4 \text{ kips per in.}$$

$$f_R = \sqrt{(3.4)^2 + (2.4)^2} = 4.2 \text{ kips per in.}$$

Using strength capacity for fillet welds,

$$n = \frac{4.2}{(1.7)(0.928)} = 2.7, \text{ say } 3/16\text{-in.}$$

But due to ductility requirements stated hereinbefore, increase weld size by 40%,

$$n_{REQ'D} = 2.7(1.4) = 3.8, \text{ say } 4/16 = 1/4\text{-in.}$$

But since girder flange is 1.18 in. thick, minimum size fillet weld per UBC Section 2251, J2.2b (Table J2.4) is 5/16-in.

Use 5/16-in. Fillet Welds (each side)

Check **gusset plate thickness** (against weld size required for strength):
For two sided fillet, using E70 electrodes and A36 steel,

$$t_{MIN} = \frac{5.16D}{F_y} = \frac{(5.16)(4.0)}{36.0} = 0.57 \text{ in.}$$

0.75 in. > 0.57 O.K.

Check **local web yielding** of girder per UBC Section 2251, K1.3:

$$\frac{R}{t_w\,(N + 2.5k)} \leq (0.66F_y)(1.7)$$

R = $(V_b)(1.4)$ = (195)(1.4)= 273 kips (Compression)
(Use 40% increase for load.)

$$\frac{R}{t_w(N + 2.5k)} = \frac{273}{(0.725)(41.4 + (2.5)(2.125))} = 8.0 \text{ ksi}$$

$(0.66F_y)(1.7)$ = (0.66 x 36.0)(1.7) = 40.8 ksi > 8.0 O.K.

Weldment Does Not Overstress Gusset or W36

6. Gusset Plate to Column Connection (Figure 15)

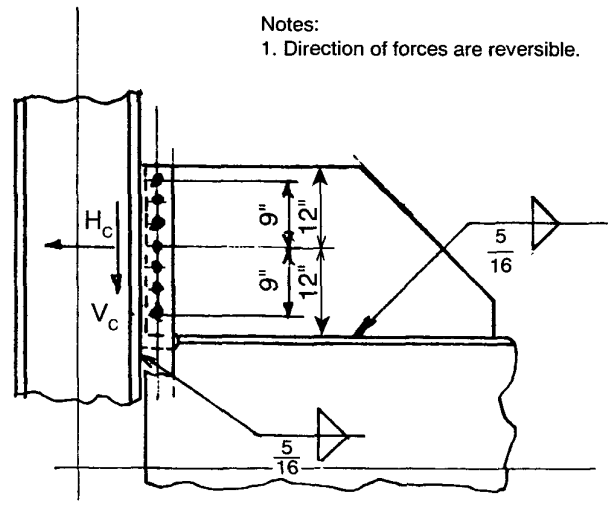

Figure 15
Partial Elevation of Connection

H_c = 77 kips , V_c = 129 kips

For weld loads to column,

$$f_H = \frac{H_c}{(2)(24)} = \frac{77}{48} = 1.6 \text{ kips per in.}$$

$$f_v = \frac{V_c}{(2)(24)} = \frac{12.9}{48} = 2.7 \text{ kips per in.}$$

$$f_R = \sqrt{(1.6)^2 + (2.7)^2} = 3.1 \text{ kips per in.}$$

Using strength capacity for fillet welds,

$$n = \frac{3.1}{(1.7)(0.928)} = 2.0, \text{ say } 2/16\text{-in.}$$

But since column flange is 1.03 in. thick, minimum fillet weld size is 5/16-in.

Use 5/16-in. Fillet Welds (each side)

For bolt loads, eccentricity due to vertical component of loading, M = $(V_c)(2^3/_4")$, will be neglected since shear plate is continuous from girder to gusset, about 58 $^3/_4$-in. long.

Total load in bolts at gusset plate,

$$R = \sqrt{H_c^2 + V_c^2} = \sqrt{(72)^2 + (129)^2} = 150 \text{ kips}$$

and if 7 bolts used at 3 in. spacing with 1" ϕ A325-SC in single shear,

$F_{CAP} = (7)(13.4)(1.7) = 159$ kips > 150 O.K.

Use 7 – 1" ϕ A325-SC (spaced 3 in. O.C.)

For shear plate, try 1/2 -in. thick plate (to column flange).

Forces to be resisted by this 24 in. long upper portion of the shear plate:

$H_c = 77$ kips , $V_c = 129$ kips

Strength of 1/2-in. shear plate per UBC Section 2211.4.2:

$V_s = 0.55F_y\,dt$, $P_{st} = F_y A$

$V_s = (0.55)(36.0)(24)(0.50) = 238$ kips > 129 O.K.

$P_{st} = (36.0)(24)(0.50) = 432$ kips > 77 O.K.

Check net area of plate for tension:

$$\frac{A_e}{A_g} \geq \frac{1.2\,\alpha\,F^*}{F_u}$$

$$F^* = \frac{77}{24.0 \times 0.50} = 6.4 \text{ ksi}$$

$\alpha = 1.00$

$$\frac{A_e}{A_g} \geq \frac{(1.2)(1.00)(6.4)}{58.0} = 0.13$$

$A_e \geq (0.13)(A_g) = (0.13)(24.0 \times 0.50) = 1.6$ sq. in.

$A_{eACTUAL} = (24.0 \times 0.50) - (7 \times 1.125 \times 0.50)$

$= 8.1$ sq. in. > 1.6 O.K.

Use 1/2-in. Shear Plate (4 1/2-in. wide)

7. Girder to Column Connection (Figure 16)

Notes:
1. Direction of forces are reversible.
2. Centroid of shear plate does not exactly coincide with girder, but the eccentricity is small, ± 1", and can be neglected.

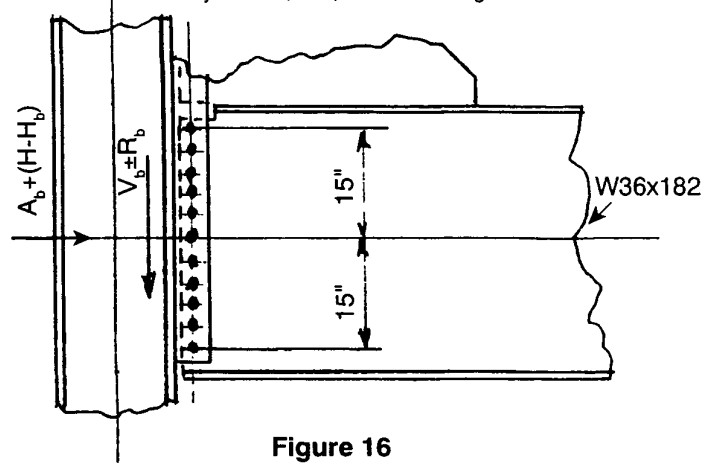

Figure 16
Partial Elevation of Connection

$V_b = 195$ kips , $H_b = 275$ kips

$H = 352$ kips

$A_b = 18$ kips , $R_b = 14$ kips

$V_b \pm R_b = 195 + 14 = 209$ kips

$A_b \pm (H-H_b) = 18 + (352 - 275) = 95$ kips

For weld loads,

$$f_H = \frac{A_b + (H-H_b)}{(2)(34.75)} = \frac{95}{69.5} = 1.4 \text{ kips per in.}$$

$$f_v = \frac{V_b \pm R_b}{(2)(34.75)} = \frac{209}{69.5} = 3.0 \text{ kips per in.}$$

$$f_R = \sqrt{(1.4)^2 + (3.0)^2} = 3.3 \text{ kips per in.}$$

Using the strength capacity for fillet welds,

$$n = \frac{3.3}{(1.7)(0.928)} = 2.2, \text{ say } 3/16\text{-in.}$$

But must use minimum fillet of 5/16-in.

Use 5/16-in. Fillet Welds (each side)

Check **shear plate thickness** (against weld size required for strength):
For two sided fillet,

$$t_{MIN} = \frac{5.16\,D}{F_y} = \frac{(5.16)(2.2)}{36.0} = 0.31"$$

Assume 1/2-in. plate,
0.5" > 0.31 O.K.

For bolt loads, neglect eccentricity. Total load on bolts at girder,

$R = \sqrt{(209)^2 + (95)^2} = 230$ kips

Try 11 – 1 in. ϕ A325-SC at 3 in. spacing

$F_{CAP} = (11)(13.4)(1.7) = 251$ kips > 230 O.K.

Use 11 – 1 in. ϕ A325-SC (spaced 3 in. O.C.)

Use 1/2-in. Shear Plate (O.K. by inspection)

8. Summary of Design of Brace and Girder to Column Connection

Gusset Plate: (i) 3/4-in. thick x 45 1/2-in. long x 24 in. wide
(ii) 5/16-in. fillet weld to girder (41 1/2-in. long each side)

Flange Plate and Web Plate: See Section H6

Shear Plate: (i) 1/2-in. thick x 58 3/4 in. long x 4 1/2-in. wide
(ii) 7 – 1 in. ϕ A325-SC bolts to gusset plate
(iii) 11 – 1 in. ϕ A325-SC bolts to girder
(iv) 5/16-in. fillet weld to column (each side)

Part III – X Bracing Design

This portion of the booklet illustrates the seismic design of a Special Concentrically Braced Frame (SCBF) using X or Cross Bracing. See Fig. 17. Both the design of members and connections are described.

Double angles are indicated for the braces, but in lieu of these angles other members such as tubes, pipes or wide flange shapes could be employed.

All required field connections are bolted with the use of A325-SC bolts in slip critical connections. Field welded connections could also be used.

SECTION J. DESIGN OF BRACE (4TH STORY)

For general information on seismic forces, see SECTIONS A through C of this booklet.

Note: P_E = brace seismic force

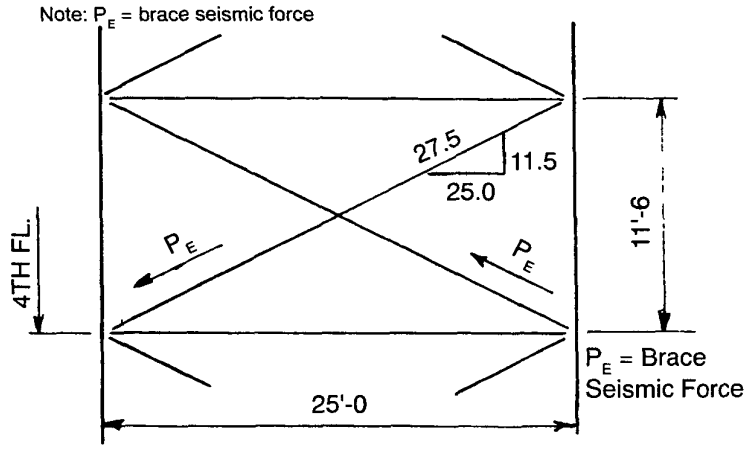

Figure 17
Partial Frame Elevation

In compliance with UBC Section 2211.9.2.1 and 2211.9.2.2, members for braces must resist both tension and compression.

Referring to SECTION D, "Analysis of Braced Frame," the seismic shear in fourth story =241 kips

Thus, $2P_E\,(25.0/27.5) = 241$, $P_E = \pm 133$ kips per brace

$$P_{EQUIV} = \frac{133}{1.33} = \pm 100 \text{ kips per brace}$$

Try 2-L's 5x5x3/4, with 3/4-in. spacers and gusset plates at their connection.

Per UBC Section 2211.9.2.4, angles must be compact and meet the criteria:

$$\left(\frac{b}{t}\right)_{ALLOW} = \frac{52}{\sqrt{F_y}} = \frac{52}{\sqrt{36}} = 8.7$$

$$\left(\frac{b}{t}\right) = \frac{5}{0.75} = 6.6 < 8.7 \quad \text{O.K.}$$

Note: This criteria precludes the use of 6x6x1/2 or 6x6x5/8 angles for these braces.

Per UBC Section 2211.9.2.1,

$$\frac{kl}{r} \le \frac{1{,}000}{\sqrt{F_y}} = \frac{1{,}000}{\sqrt{36}} = 167 \text{ Max}$$

Now considering buckling of 2-L's 5x5x3/4:
Per AISC Manual, p. 3-61 (for 2-L's 3/8 in. back-to-back)
r_x = 1.51in.
r_y = 2.28 in.(conservative since angles are 3/4-in. back-to-back)

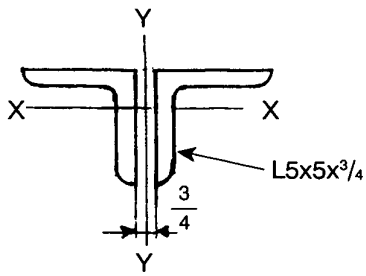

Figure 18
Double Angle Brace

The unsupported length for in-plane buckling is l_x = 27.5/2 = 13.8 ft. since tension brace will stabilize the compression force.

The unsupported length for out-of-plane buckling is l_y = 27.5 ft. since one pair of brace angles is interrupted at its mid-point intersection; hence, tension brace may not provide a rigid lateral support for the compression brace.
Thus,

$$\left(\frac{kl}{r}\right)_x = \frac{(1.0)(13.8 \times 12)}{1.51} = 110 \quad \text{In-plane buckling}$$

$$\left(\frac{kl}{r}\right)_y = \frac{(1.0)(27.5 \times 12)}{2.28} = 145 \quad \text{Out-of-plane buckling (Governs)}$$

$$145 < \frac{1{,}000}{\sqrt{F_y}} = 167 \quad \text{O.K.}$$

F_a = 7.10 ksi per AISC Manual, p. 3-16

$P_{CAP} = (F_A)(A) = (7.10)(13.9) = 99$ kips

$99 \approx 100$ O.K.

Use 2-L's 5x5x3/4 Brace

Note: Since connection is bolted, check for effective net area must be made as done in SECTION M.

Since critical buckling mode is about the out-of-plane or y-y axis, must meet the requirements of UBC Section 2211.9.2.3 for built-up members. Namely, provide stitches.

(i) $\left(\frac{l}{r}\right)_{Element} \leq 0.4 \left(\frac{l}{r}\right)_{Member}$

(ii) Tot[illegible] of [illegible]

(iii) Bolted stitches not permitted in middle one fourth of the clear brace length.

Thus, $\left(\frac{l}{r}\right)_{Element} \leq (0.4)(145) = 58$

For L 5x5x3/4, r_y = 1.51 in. per AISC Manual, p. 1-47

$\left(\frac{l}{1.51}\right)_{Element} = 58$, l = 88 in. max. spacing of stitches

with total length of brace = (27.5)(12) = 330 in.

$n = \frac{330}{88} = 4$ spaces or 3 stitches minimum for full length

$F_{TRANSFER\ TOTAL} = (F_y)(A) = (36.0)(6.94) = 250$ kips (large)

Provide 1 stitch plate each side of brace intersection, and utilize splice plate at intersection as a stitch plate.

Shear transfer per stitch plate = V

V = 250/3 = 83 kips & using 1 1/8" ϕ bolts

n = 83/(1.7)(16.9) = 2.9 bolts per stitch plate

Use Stitch Plate 3/4-in. thick x 6 in. wide with 3 – 1 1/8" ϕ A325-SC bolts (See Figure 20)

SECTION K. DESIGN OF GIRDER (5TH FLOOR)

For the case of the symmetrical X Bracing system indicated, there are usually few seismic requirements imposed upon the girder except to drag seismic forces from the floor system into the connection at the brace-girder-column intersection. Basically, it must resist vertical load and provide adequate strength for the connection at the brace-girder-column intersection.

Loads imposed on girder,

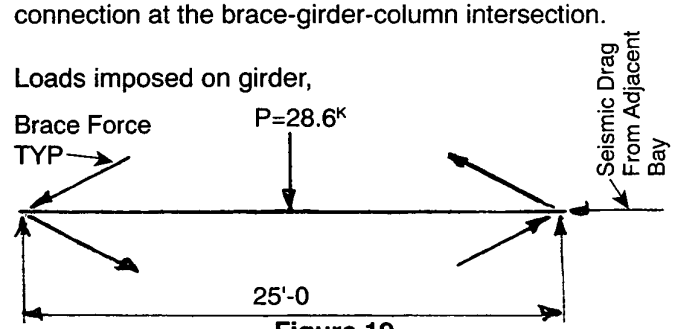

Figure 19
Reactions on Girder

$M = \frac{PL}{4}$ P = Vertical load per SECTION D

(2 [illegible]6)(25.0)

$$S_{REQD} = \frac{M}{F_b} = \frac{(179)(12)}{24.0} = 90 \text{ in.}^3$$

Although a W18X50 would suffice, a W24x103 will be selected to provide an improved connection for the braced frame, as shown in SECTION N, especially for shear rupture.

For W24x103, S = 245in.^{3} > 90 O.K.

Use W24x103 Girder

SECTION L. DESIGN OF COLUMN (3RD TO 5TH FLOOR)

Design of column, same as for chevron bracing in SECTION G, based upon column strength using a factored seismic load of $3\left(\frac{R_w}{8}\right)$.

Use W14x132 Column

SECTION M. CONNECTION DESIGN OF BRACE INTERSECTION

Per UBC Section 2224.1, design connection using high-strength slip-critical bolts, A325-SC.

1. Design Criteria

Using the force criteria of UBC Section 2211.9.3.1, the connections shall have the strength to resist the lesser of the following:

(i) The strength of the brace in axial tension, $P_{st} = F_y A$.

(ii) $3\left(\frac{R_w}{8}\right)$ times the force in the brace due to the prescribed seismic forces, in combination with gravity loads.

(iii) The maximum force that can be transferred to the brace by the system.

Thus, connection strength required for brace:

(i) $P_{1B} = (F_y)(A) = (36.0)(13.9) = 500$ kips

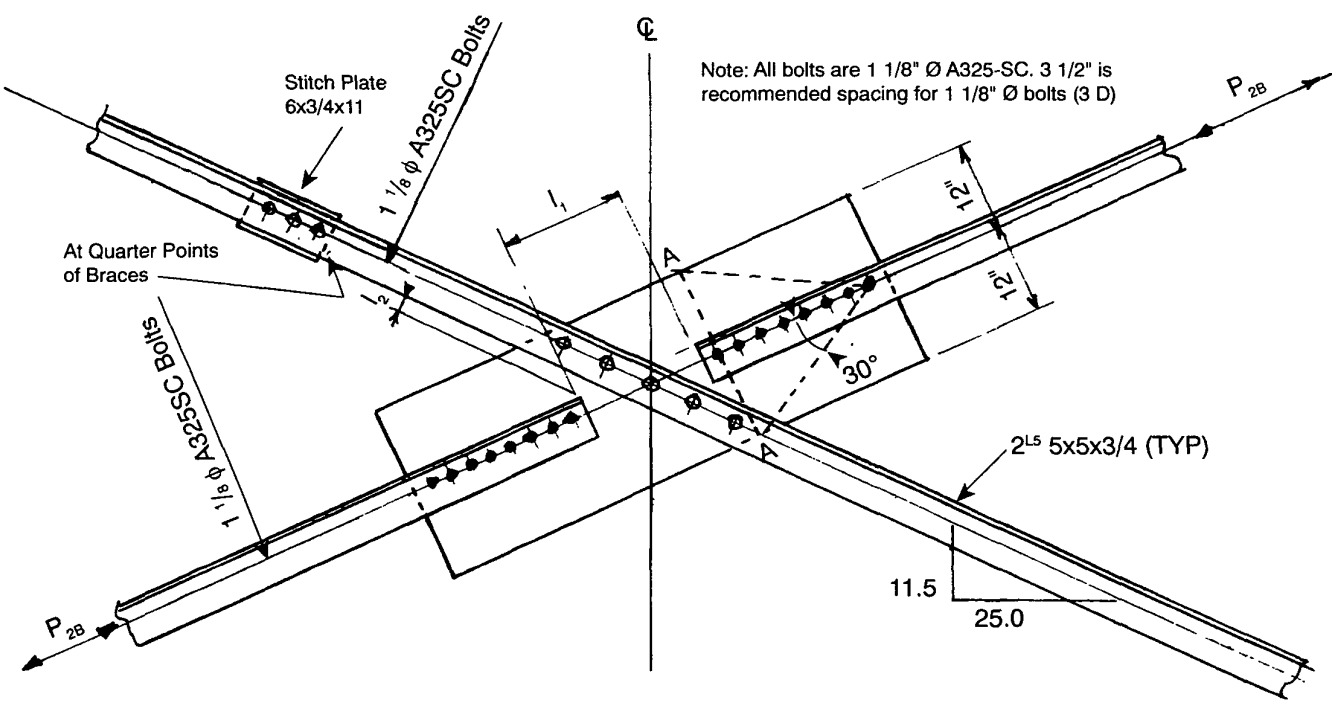

Figure 20
Brace Intersection Detail

(ii) $P_{2B} = 3\left(\frac{R_w}{8}\right)(P_E + P_v) = 3\left(\frac{9}{8}\right)(133+0) = 450$ kips

(iii) P_{3B} = Unknown at this time

Hence, the smaller force = **450 kips (governs)**

2. Connection of Brace to Splice Plate

For brace connection, use strength criteria for connection capacity per UBC Section 2211.4.2.

Thus for 1 1/8-in. ϕ A325-SC in double shear,
F_{CAP} = (1.7)(Allowable)
F_{CAP} = (1.7)(33.8) = 57.5 kips per bolt
(See AISC Manual p. 4-5)

n = 450/57.5 = 7.8 bolts

Use 8 – 1 1/8" ϕ A325-SC (double shear)

Now check **effective net area** of brace L's 5x5x3/4 in accordance with UBC Section 2211.8.3.2, Formula (11-6), deducting for single row of 1 1/8-in. bolt holes as shown in Figure 20.

$$\frac{A_e}{A_g} \geq \frac{1.2\,\alpha\,F^*}{F_u}$$

Note: Please refer to addendum on Pg. 32 for information regarding steel yield & tensile strengths.

$$F^* = \frac{P_{2B}}{A} = \frac{450}{13.9} = 32.3 \text{ ksi}$$

$\alpha = 1.00$

$$\frac{A_e}{A_g} \geq \frac{(1.2)(1.00)(32.3)}{58.0} = 0.67$$

$A_e \geq (0.67)(13.9) = 9.3$ sq. in.

$A_{eACTUAL}$ = Effective Net Area per UBC Section 2251, B3.
$= U\,A_{net}$
$= (0.85)(13.9 - 2 \times 1.25 \times 0.75)$
$A_{eACTUAL} = 10.2$ sq in. > 9.3 O.K.

Use 8 – 1 1/8" ϕ Bolts to 2-L's 5x5x3/4

3. Splice Plate

The analysis of the splice plate for the braces will be based upon **Whitmore's Method** for compression forces and the **Method of Sections** for tension forces. Capacities will be based upon strength design capacity.

Try 3/4-inch thick plate by 24 inches wide.

a. Using **Whitmore's Method**, based on compressive force along Section A-A (Figure 20).

Effective width = 2 (24 1/2 x tan 30°) = 28.3 in.
Thus, use the maximum plate width provided = 24" resisting P_{2B} = 450 kips.

Base compressive capacity upon length "l_1" =16 in.
Assume k=0.80 due to partial fixity

$$\frac{kl}{r} = \frac{(0.80)(16)}{(0.29)(0.75)} = 59,$$

per AISC Manual, p. 3-16, F_a = 17.5 ksi

Increase by 1.7 for strength capacity

$P_{sc} = 1.7\,F_a\,A = (1.7)(17.5)(24.0 \times 0.75)$

P_{sc} = 536 kips > 450 O.K.

3/4-in. Plate O.K.

b. Using **Method of Sections** through net section for tension force along Section A-A.

$P_{st} = F_y\,A = (36.0)(24.0 \times 0.75) = 648$ kips > 450 O.K.

Effective net area is O.K. by inspection since there is only 1 line of bolt holes.

3/4-in. Plate O.K.

c. Checking **Bolt Bearing Stresses**
To prevent tearout, splitting and crushing of gusset plate, check bolt bearing stresses.

In accordance with UBC Section 2251, J3.8, Formula (J3-5),

$$s \leq \frac{2P}{F_u\,t} + \frac{d}{2}$$

P = Allowable stress design capacity for 1 1/8" ϕ A325-SC in double shear.

P = 33.8 kips

$$s \leq \frac{(2)(33.8)}{(58.0)(0.75)} + \frac{1.125}{2} = 1.55 + 0.56 = 2.11 \text{ in.}$$

2.11 in. < 3 1/2-in. provided O.K.

3/4-in. Plate O.K.

d. Setback of Angle Braces at Intersection
In accordance with UBC Section 2211.9.3.3, where brace will buckle out-of-plane, stop angle braces at least 2 times splice plate thickness from the through brace = l_2 (see Figure 20).

l_2 = (2)(0.75) = 1 1/2-in.

4. Summary of Design of Brace Intersection Connection

Splice Plate:	3/4-in. thick x 24 in. wide
Interrupted Angles:	8 – 1 1/8" ϕ A325-SC bolts each end, spaced 3 1/2" centers and 2" edge distance
Through Angles:	5 – 1 1/8" ϕ A325-SC bolts (for lateral support of plate)

SECTION N. CONNECTION DESIGN OF BRACE AND GIRDER TO COLUMN (5TH FLOOR)

1. Design Criteria

Use the force and capacity criteria of UBC Sections 2211.9.3.1 and 2211.4.2
See SECTION I.1 for details.

2. Analysis Method

Utilize the **"Uniform Force Method"** for the analysis. See SECTION I.2 for details, including free-body diagrams used such that moments do not exist at connection interfaces. Also, see Figures 10, 11 and 12 for nomenclature and free-bodies. The shear plate is assumed slit (broken) along the girder flanges for analysis purposes.

Note that the centroid location, α **and** β, are located on a common point lying on the centerline of the braces. See Fig. 21.

3. Determining Gusset Plate Dimensions & Forces

$$\alpha = e_b \tan\theta - e_c + \beta \tan\theta$$

$$\tan\theta = \frac{25.0}{11.5} = 2.174$$

e_b = 12.3 in., e_c = 7.2 in.

After several trial solutions, set β=7.0 in. as shown in Figure 21.

Note: For analysis purposes, the shear plate is assumed slit horizontally at the girder flanges

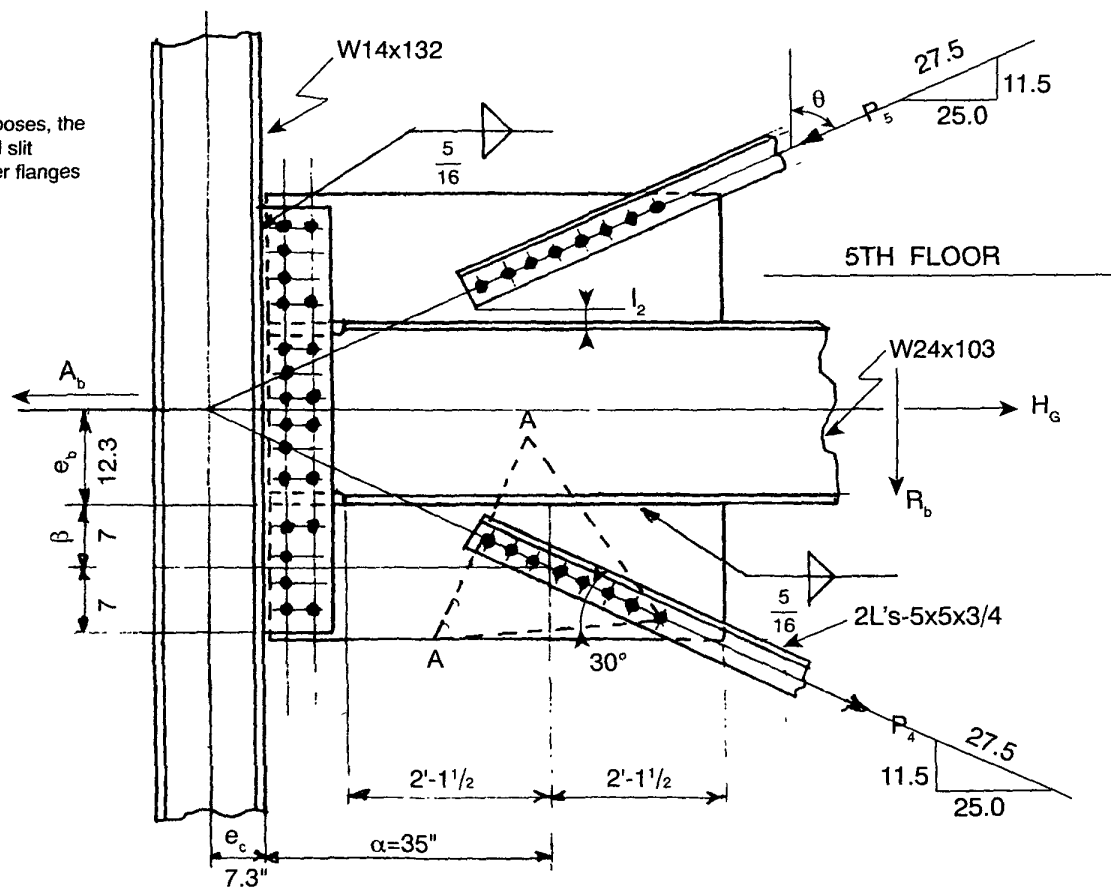

Figure 21
Connection of Brace and Girder to Column

$\alpha = (12.3)(2.174) - 7.2 + (7.0)(2.174)$
$\alpha = 34.8$ in. (No eccentricity.)

Set $\alpha = 35.0$ in. as indicated (slight eccentricity)

Thus, $r = \sqrt{(\alpha + e_c)^2 + (\beta + e_b)^2}$

$r = \sqrt{(35.0 + 7.2)^2 + (7.0 + 12.3)^2} = \sqrt{2{,}153}$

$r = 46.4$ in.

Connection strength required for braces
2-L's 5x5x3/4 at 4th Story :

(i) $P_{1B} = F_y A = (36.0)(13.9) = 500$ kips

(ii) $P_{2B} = 3\left(\frac{R_w}{8}\right)(P_E + P_v) = 3(9.8)(133+0) = 450$ kips

Hence, the smaller force = **450 kips governs**
$P_4 = 450$ kips

Connection strength required for braces 2-L's 5x5x3/4 at 5th Story:

(i) $P_{1B} = F_y A = (36.0)(13.9) = 500$ kips

(ii) $P_{2B} = 3\left(\frac{R_w}{8}\right)(P_E + P_v) = (450)\left(\frac{355}{442}\right) = 360$ kips

Note: ratio of story shear at 5th to 4th stories, per Table 1 is $^{355}/_{442}$

Hence, the smaller force = 360 kips governs
$P_5 = 360$ kips

The shears and axial forces acting on the connection are as follows in the 4th Story:

$$V_c = \frac{\beta}{r}(P_4) = \left(\frac{7.0}{46.4}\right)(450) = 68 \text{ kips}$$

$$H_c = \frac{e_c}{r}(P_4) = \left(\frac{7.2}{46.4}\right)(450) = 70 \text{ kips}$$

$$V_b = \frac{e_b}{r}(P_4) = \left(\frac{12.3}{46.4}\right)(450) = 119 \text{ kips}$$

$$H_b = \frac{\alpha}{r}(P_4) = \left(\frac{35.0}{46.4}\right)(450) = 339 \text{ kips}$$

Checking values above based on free-body of gusset:

$\sum H = 0$

$$H = H_b + H_c = (P_4)\left(\frac{25.0}{27.5}\right) = (450)\left(\frac{25.0}{27.5}\right) = 409 \text{ kips}$$

$\sum V = 0$

$$V = V_b + V_c = (P_4)\left(\frac{11.5}{27.5}\right) = (450)\left(\frac{11.5}{27.5}\right) = 188 \text{ kips}$$

$V_b + V_c = 119 + 68 = 187$ kips O.K.

The shears and axial forces acting on the brace connection in the 5th story can be reduced by the ratio (355/442) = 0.80, but for simplification make design same as for brace connections in the 4th story.

Vertical shear in girder $R_b = 14$ kips

Set dimensions of the gusset plate and the portion of the shear plate extending onto the gusset plate as shown in Figure 21. Please note the following:

- The gusset plate weldment to the girder is centered about the centroid α, such that there is 25 1/2 inches of weldment on either side of this centroid.
- The shear plate weldment to the column which is beyond the girder is centered about the centroid β, such that there is 7 inches of weldment on either side of this centroid. Also, the bolt group attachment to the gusset plate is also centered about β.

Hence, by utilization of the "Uniform Force Method," moments do not exist at these interfaces:

(i) Gusset Plate to Girder Weldment

(ii) Gusset Plate to Column, including both weldment and bolts.

(iii) Girder to Column, including both weldment and bolts.

Thus, only axial forces and shears exist at these interfaces of these connections. This keeps the design simple and direct.

Setback of Angle Braces from Girder:

In accordance with UBC Section 2211.9.3.3, where braces will buckle out-of-plane, stop angle braces at least 2 times gusset plate thickness from girder = l_2 (See Figure 21)
$l_2 = (2)(0.75) = 1$ 1/2-in.

4. Gusset Plate

Based on SECTION M, a 3/4-in. splice plate is re-

Figure 21 using Whitmore's Method and Section A-A, it is evident by inspection that a 3/4-in. gusset plate is adequate, providing the web of the girder is in the range of a 1/2 to 3/4-in. thick element.

Use 3/4-in. Gusset Plate

5. Gusset Plate to Girder Connection (Figure 22)

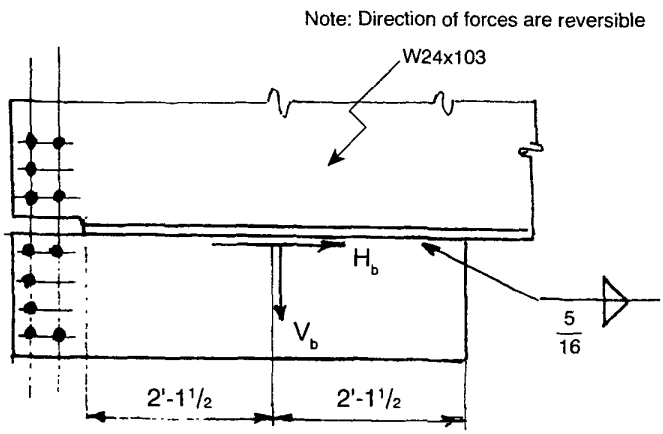

Figure 22
Partial Elevation of Connection

H_b = 339 kips, V_b = 119 kips

For weld loads, using double fillet welds,

$$f_H = \frac{H_b}{(2)(51)} = \frac{339}{102} = 3.3 \text{ kips per in.}$$

$$f_V = \frac{V_b}{(2)(51)} = \frac{119}{102} = 1.1 \text{ kips per in.}$$

$$f_R = \sqrt{(3.3)^2 + (1.1)^2} = 3.5 \text{ kips per in.}$$

Using strength capacity for fillet welds,

$$n = \frac{3.5}{(1.7)(0.928)} = 2.2, \text{ say 3/16-in.}$$

But due to ductility requirements stated in SECTION I.2 increase weld size by 40%.

$$n_{REQD} = (2.2)(1.4) = 3.1, \text{ say 1/4-in.}$$

Since girder flange is 0.98 in. thick, minimum size fillet weld per UBC Section 2251, J2.2b (Table J2.4) is $^5/_{16}$-in.

Use 5/16-in. Fillet Welds (each side)

Check **gusset plate thickness** (against weld size required for strength):

For two sided fillet,

$$t_{min} = \frac{5.16D}{F_y} = \frac{(5.16)(3.1)}{36.0} = 0.45 \text{ in.}$$

0.75 > 0.45 O.K.

Check **local web yielding** of girder per UBC Section 2251, K1.3:

$$\frac{R}{t_w(N + 2.5k)} \leq (0.66F_y)(1.7)$$

$$R = (V_b)(1.4) = (119)(1.4) = 167 \text{ kips (Compression)}$$

$$\frac{167}{(0.55)(51.0 + (2.5)(1.75))} = 5.5 \text{ ksi}$$

$$F_b = (0.66F_y)(1.7) = (0.66 \times 36.0)(1.7) = 40.8 \text{ ksi} > 5.5 \quad \text{O.K.}$$

Weldment Does Not Overstress Gusset or W24

6. Gusset Plate to Column Connection

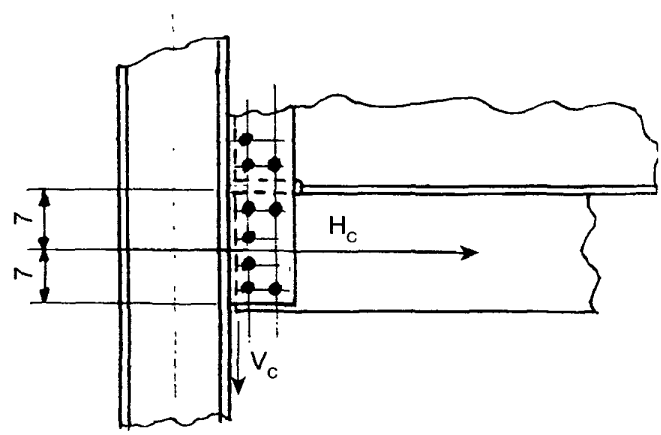

Figure 23
Partial Elevation of Connection

H_c = 70 kips , V_c = 68 kips

For weld loads to column,

$$f_H = \frac{H_c}{(2)(14)} = \frac{70}{28} = 2.5 \text{ kips per in.}$$

$$f_V = \frac{V_c}{(2)(14)} = \frac{68}{28} = 2.4 \text{ kips per in.}$$

$$f_R = \sqrt{(2.5)^2 + (2.4)^2} = 3.5 \text{ kips per in.}$$

Using strength capacity for fillet welds,

$$n = \frac{3.5}{(1.7)(0.928)} = 2.2, \text{ say } 3/16\text{-in.}$$

But since column flange is 1.03 in. thick, minimum fillet weld size is 5/16-in.

Use 5/16-in. Fillet Welds (each side)

For bolting shear plate to gusset plate, total load on bolts = R

$$R = \sqrt{H_c^2 + V_c^2} = \sqrt{(70)^2 + (68)^2} = 97 \text{ kips}$$

Using 1 1/8-in. ϕ A325-SC in single shear, and strength capacity,

$$n = \frac{97}{(1.7)(16.9)} = 3.4 \text{ bolts}$$

Thus, 4 – 1 1/8-in. bolts are adequate, but add 2 bolts in second row to match bolts required at girder to column connection, as shown in Figure 21.

Use 6 – 1 1/8-in. ϕ A325-SC (spaced 3 1/2-in. O.C.)

For shear plate thickness, see next SECTION N.7.

7. Girder to Column Connection (Figure 24)

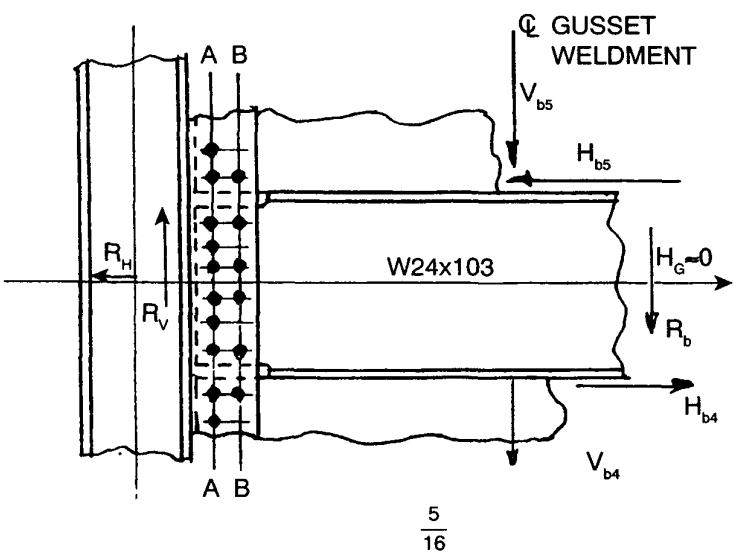

Figure 24
Partial Elevation of Connection

The method of analysis for the "Uniform Force Method" must be modified to take into account the brace forces occurring at both the top and bottom of the girder.

Note that the axial force in the girder H_G is approximately 0, except for some drag forces from the braced bay. From Figure 24 it can be shown that for equilibrium, taking $\sum H = 0$ and $\sum V = 0$ that:

$$R_H = H_{b4} - H_{b5}$$
$$R_v = R_b \pm (V_{b4} + V_{b5})$$

As described in SECTION N.3,

P_4 = 450 kips with H_{b4} = 339 kips & V_{b4} = 119 kips
P_5 = 360 kips, then by direct proportion

$$H_{b5} = \left(\frac{360}{450}\right)(H_{b4}) = (0.80)(339) = 271 \text{ kips}$$

$$V_{b5} = \left(\frac{360}{450}\right)(V_{b4}) = (0.80)(119) = 95 \text{ kips}$$

Thus, $R_H = H_{b4} - H_{b5} = 339 - 271 = 68$ kips

$$R_v = R_b + V_{b4} + V_{b5} = 14 + 119 + 95 = 228 \text{ kips}$$

For weld loads,

$$f_H = \frac{R_H}{(2)(24.5)} = \frac{68}{49} = 1.4 \text{ kips per in.}$$

$$f_V = \frac{R_V}{(2)(24.5)} = \frac{228}{49} = = 4.7 \text{ kips per in.}$$

$$f_R = \sqrt{(1.4)^2 + (4.7)^2} = 4.9 \text{ kips per in.}$$

Using strength capacity for fillet welds,

$$n = \frac{4.9}{(1.7)(0.928)} = 3.1, \text{ say } 1/4\text{-in.}$$

But must use minimum fillet of 5/16-in. due to column flange thickness = 1.03 in.

Use 5/16-in. Fillet Welds (each side)

Assuming 1/2-in. shear plate, and checking shear plate thickness (against weld size required for strength):

For two sided fillet,

$$t_{MIN} = \frac{5.16D}{F_y} = \frac{(5.16)(3.1)}{36.0} = 0.45''$$

0.50 in > 0.45 O.K.

1/2-in. Shear Plate O.K.

For bolt loads, neglect eccentricity. Total load on bolts at girder,

$$R = \sqrt{(R_H)^2 + (R_v)^2} = \sqrt{(68)^2 + (228)^2} = 238 \text{ kips}$$

Using 1 1/8-in. ϕ A325-SC bolts and strength design,

$$n = \frac{238}{(1.7)(116.9)} = 8.3 \text{ bolts}$$

Use 10 – 1 1/8-in. ϕ A325-SC (spaced 3 1/2-O.C.)

Checking 1/2-in. shear plate for both **shear yielding and shear rupture** along A-A, as based on UBC Sections 2251, F4 and J4.

$$V_{CAP\ YIELD} = (0.55\ F_y)(A_{GROSS})$$

$$= (0.55 \times 36.0)(24.5 \times 0.5)$$

$$V_{CAP\ YIELD} = 242 \text{ kips} > 228 \quad \text{O.K.}$$

$$V_{CAP\ RUPTURE} = (1.7)(0.30\ F_u)(A_{NET})$$

$$= (1.7)(0.30 \times 58.0)\ [(24.5 \times 0.5) - (6 \times 1.25 \times 0.50)]$$

$$V_{CAP\ RUPTURE} = 251 \text{ kips} > 228 \quad \text{O.K.}$$

Use 1/2-in. Shear Plate

Checking W24x103 girder for both shear yielding and shear rupture along B-B:

$$V_{CAP\ YIELD} = (0.55F_y)(A_{GROSS})$$

$$= (0.55 \times 36)(21.0 \times 0.55)$$

$$V_{CAP\ YIELD} = 229 \text{ kips} > 228 \quad \text{O.K.}$$

$$V_{CAP\ RUPTURE} = (1.7)(0.30\ F_u)(A_{NET})$$

$$= (1.7)(0.30 \times 58.0)(21.0 \times 0.55 - 4 \times 1.25 \times 0.55)$$

$$V_{CAP\ RUPTURE} = 260 \text{ kips} > 228 \quad \text{O.K.}$$

Use W24x103 Girder (Minimum W24 that can be used)

8. Summary of Design of Brace and Girder to Column Connection

Gusset Plates: (i) 3/4-in. thick x 59 1/2-in. long x 17 in. wide

(ii) 5/16-in. fillet weld to girder (51 in. long each side)

Angle Braces to Gusset Plates: (i) 8 – 1 1/8-in. ϕ A325-SC bolts to each gusset plate

Shear Plate : (i) 1/2-in. thick x 52 1/2-in. long x 8 1/2-in. wide

(ii) 6 – 1 1/8-in. ϕ A325-SC bolts to each gusset plate

(iii) 10 – 1 1/8-in. ϕ A325-SC bolts to girder

(iv) 5/16-in. fillet weld to column (52 1/2-in. long each side)

SECTION O. ALTERNATIVE CONNECTION AT COLUMN

In lieu of the shear plate connection at the column, double angles could be either bolted or welded to the gusset plates and girder. See Figure 25.

If the drag forces, A_b, to the bracing system are large, it may be necessary to provide column stiffener plates or increase the thickness of the column flange.

As shown in Figure 25, the bolts to the gusset plates and girder are in double shear, while the bolts to the column flange are in single shear.

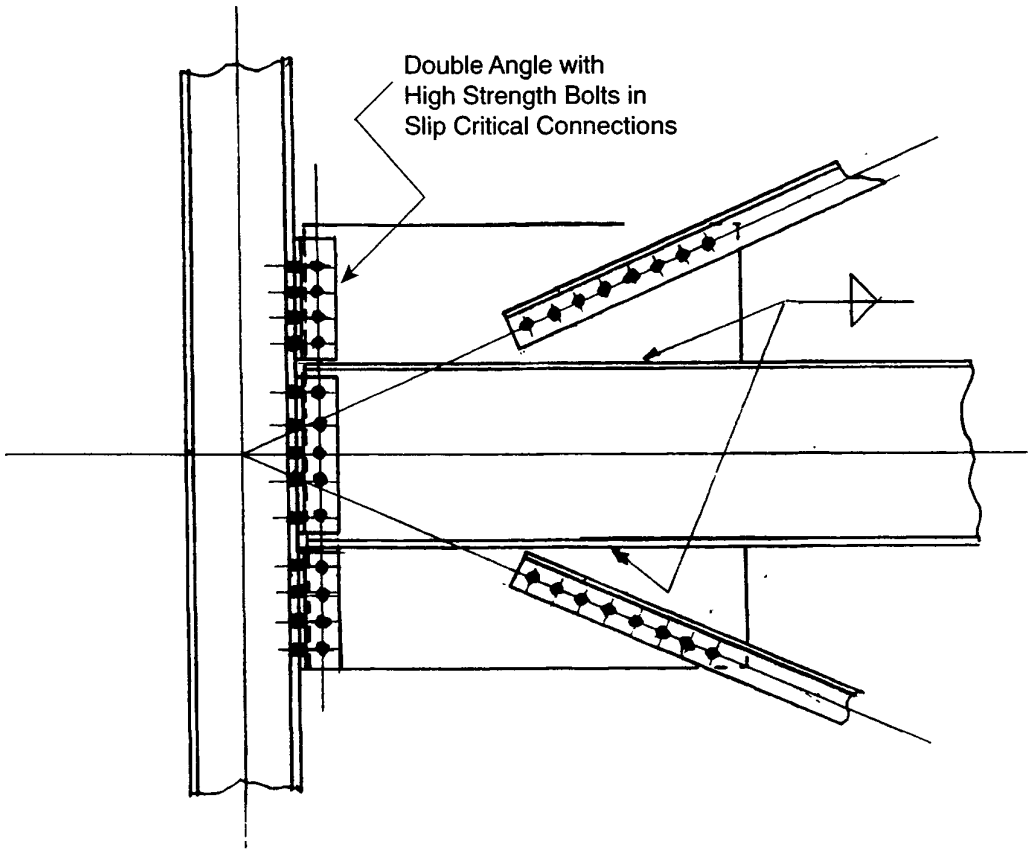

Figure 25
Alternative Connection of Brace and Girder to Column

PART IV – DESIGN RECOMMENDATIONS

The following seven recommendations are made for braced frame design. These items require special attention, and they should be carefully considered.

1. **All** braced frames should comply with the requirements for **Special Concentrically Braced Frames** in order to assure improved/adequate post-buckling capacity due to cyclic seismic loads during a major earthquake.

   Some Federal Agencies have adopted this requirement, especially since it is not difficult to achieve, nor is it costly.

2. Connections require very careful design in order to preclude premature failure. This is most important at the interface of the steel braced frame to its concrete foundation to positively transfer shear and overturning forces. It often requires special transfer devices such as shear lugs, weld plate washers, and uplift anchor bolts.

3. A reasonable number of braced frames or braced bays should be provided. Since braced frames are so efficient, there is a tendency to use very few braced frames or braced bays for a given structure. Thus, there tends to be a lack of redundancy, and the failure of one connection or member of the frame greatly decreases the entire lateral resistance of the structure to seismic forces. A prudent design suggests the use of a "reasonable" number of braced frames or braced bays be employed.

4. Provide an adequate number of drag elements across the entire length or width of the structure to transfer diaphragm floor/roof loads to the braced frames. These drag elements should be capable of resisting tension or compression forces, and they should have adequate connections to their braced frames.

5. Braces connected with bolts may require that the ends of the braces be reinforced to keep the failure out of the reduced section created by the bolt holes (effective net section). This is important since both current and future structural steels may have yield point-to-tensile strength ratios which are relatively high.

6. Bracing members can be made from a single shape in lieu of using built-up members, such as double angles. This will preclude localized buckling failures from occurring in individual members which could reduce the overall capacity of the built-up member.

7. For the design of braced frame members and their connections, it is suggested that the engineer consider a welded connection. A welded connection will eliminate problems associated with the effective area to gross area ratio that must be considered with bolted connections.

ADDENDUM

Structural Engineers should be aware that recent studies conducted by AISC & AISI indicate that most of the current production of A-36 Steel meets the mechanical property requirements of both A-36 & A572-50. Also the ratio of yield to tensile strength may be relatively high. The engineer is referred to SAC Report 95-02 "Interim Guidelines for Evaluation, Repair, Modification & Design of Steel Moment Frames," for additional information.

The primary reason for the increased yield and tensile properties of A-36 is due to modern steel producing methods used by most steel mills. Specifically, most steel produced today (1995) is produced in electric furnaces as opposed to open-hearth or basic oxygen furnaces.

The main charge in an electric furnace is scrap steel (old car bodies, washers, etc.) as opposed to iron ore used in open-hearth furnaces. Thus the chemistry of the electric furnaces steel results in higher mechanical properties than those required as minimum for A-36 Steel.

ASTM and the Structural Steel Shapes Producers Council recognize this and they are in the process of writing a proposed "Standard Specification for Steel for Structural Shapes Used in Building Framing." The proposed specification calls for an enhanced chemistry requirement, an increased minimum yield and tensile strength and a maximum yield/tensile ratio.

About the Author:

Roy Becker is a California registered structural engineer who has been actively engaged in the design of a large number of diversified structures since graduating from the University of Southern California in 1959.

These structures have varied from high-rise office buildings almost 700 feet in height, to 300 foot clear span convention centers and aircraft hangars, to Titan missile launching facilities. While most of these structures are located in California, a significant number are located in such distant locations as Saudi Arabia and Diego Garcia where unique construction requirements were necessary.

At the present time, Mr. Becker is a principal of the firm Becker and Pritchett Structural Engineers, Inc. which is located at Lake Forest, California. Before establishing his own firm, he was Chief Structural Engineer for VTN Consolidated Inc. He also served as Regional Engineer in Los Angeles for the American Institute of Construction, Inc. Prior to this he was engaged as a structural engineer with the Los Angeles engineering firm of Brandow & Johnston Associates.

He has authored the following seismic design publications for steel construction:

- "Practical Steel Design for Building 2-20 Stories," 1976.
- "Seismic Design Practice for Steel Buildings," 1988.

Mr. Becker continues to present seminars and courses related to both structural steel and seismic design, including a structural license review course, in association with California State University, Long Beach.

STRUCTURAL STEEL EDUCATIONAL COUNCIL

470 Fernwood Drive
Moraga, CA 94556
(510) 631-9570

SPONSORS

Adams & Smith
Allied Steel Co., Inc.
Bannister Steel, Inc.
Baresel Corp.
Bethlehem Steel Corporation
C.A. Buchen Corporation
Butler Manufacturing Co.
G.M. Iron Works Co.
The Herrick Corporation
Hoertig Iron Works
Hogan Mfg., Inc.
Junior Steel Co.
Lee & Daniel
McLean Steel, Inc.
Martin Iron Works, Inc.
MidWest Steel Erection
Nelson Stud Welding Co.
Oregon Steel Mills
PDM Strocal, Inc.
Reno Iron Works
H.H. Robertson Co.
Southland Iron Works
Stockton Steel
Verco Manufacturing, Inc.
Vulcraft Sales Corp.

The local structural steel industry (above sponsors) stands ready to assist you in determining the most economical solution for your products. Our assistance can range from budget prices and estimated tonnage to cost comparisons, fabrication details and delivery schedules.

Funding for this publication provided by the California Iron Workers Administrative Trust.